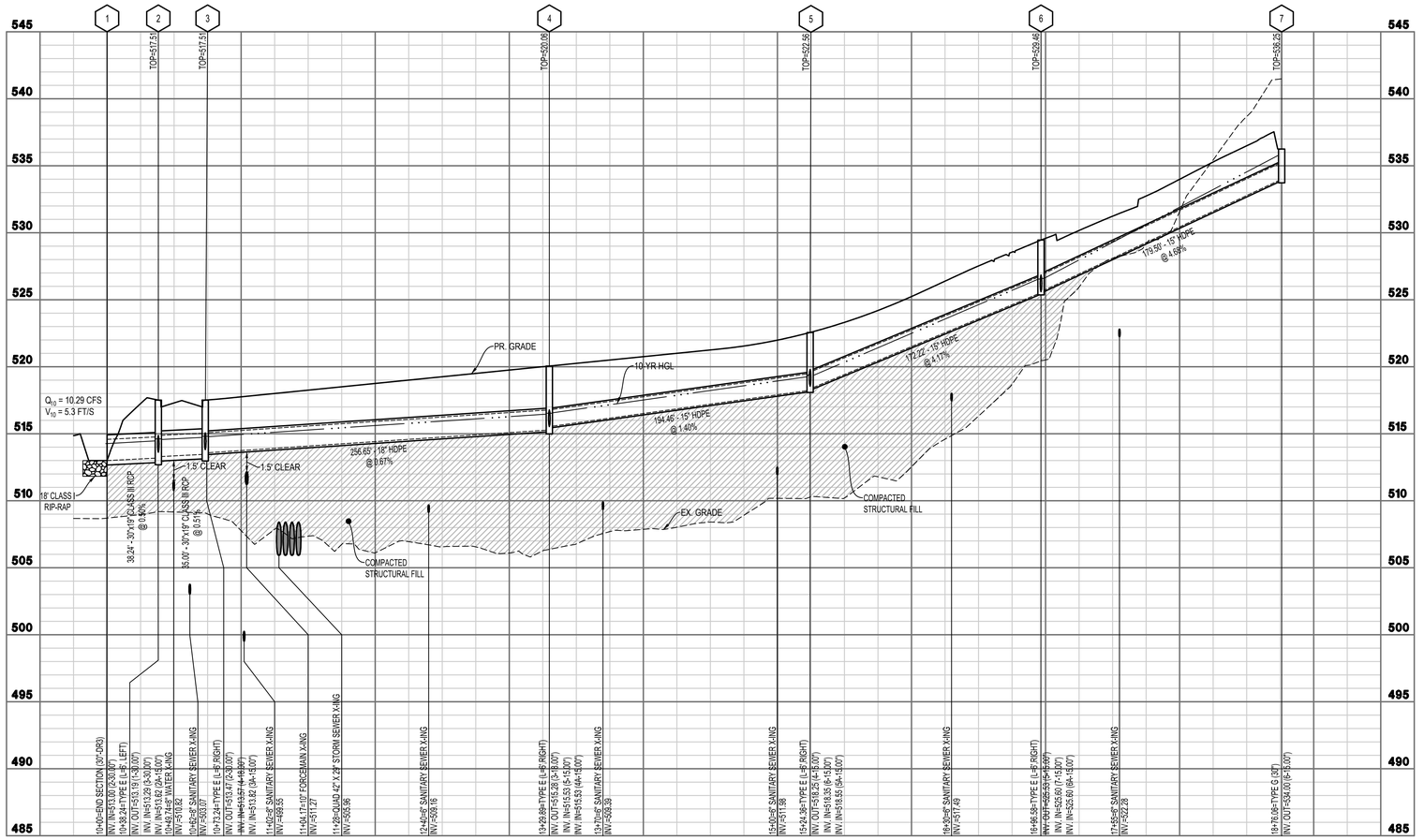

STRM 1-7 PROFILE

(SEE GRADING PLAN SHEETS 45 & 46 FOR PLAN VIEW)

0 2.5 5 10 15
VERTICAL SCALE: 1"=5'
50 25 0 50 100 150
GRAPHICAL SCALE: 1"=50'

INTEGRITY
FEDERAL SERVICES
CIVIL ENGINEERING • LANDSCAPE ARCHITECTURE • PLANNING
148 S. Queen Street, Suite 201 • Phone: 304-725-8456
Martinsburg, WV 25401 • www.ifs-ae.com

JASON P. GERHART
REGISTERED
No. 19127
STATE OF
WEST VIRGINIA
PROFESSIONAL ENGINEER
12-13-24

SEAL:

REVISIONS

1. 10/23/2024 - JEFFERSON COUNTY, WVDOH, CTUB, AND IWAW COMMENTS
2. 12/13/2024 - JEFFERSON COUNTY AND CTUB PUMP STATION COMMENTS

STORM SEWER PROFILES

BIRDHILL MEADOWS SUBDIVISION PHASE 1

TAX MAP 3, PARCEL 29; D.B. 1291, PG. 381
MIDDLEWAY TAX DISTRICT
JEFFERSON COUNTY, WEST VIRGINIA

J.C. FILE #24-12-SD

SCALE:	HORIZ.: 1"=50' VERT.: 1"=5'
DATE:	JULY 2024
JOB:	3568-0301
DRAWN: JMM	CHECK: JPG
CADD: C-CU-261.DWG	
NCS:	
SHEET:	117 OF 147

FILEPATH: S:\PROJECTS\GENERAL\3568-0301 MILLER PROPERTY\PHASE 1\ENGINEER\CAD\C-CU-261.DWG
COPYRIGHT © 2024 INTEGRITY FEDERAL SERVICES, LLC
NO REPRODUCTION OR USE OF THIS DRAWING IN ALTERED FORM OR IN PART OR ANY PROCESS WITHOUT WRITTEN AUTHORIZATION FROM INTEGRITY FEDERAL SERVICES, LLC

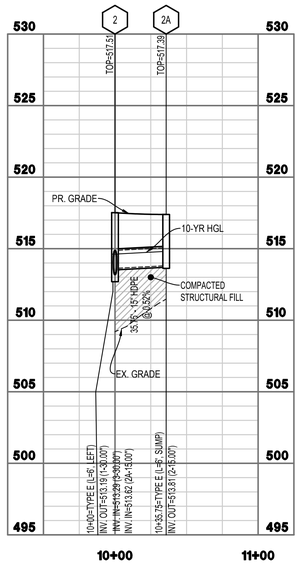

STRM 2-2A PROFILE
(SEE GRADING PLAN SHEET 46 FOR PLAN VIEW)

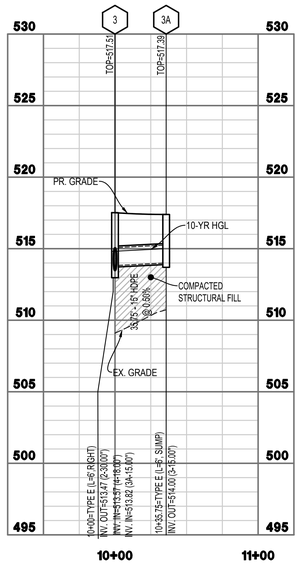

STRM 3-3A PROFILE
(SEE GRADING PLAN SHEET 46 FOR PLAN VIEW)

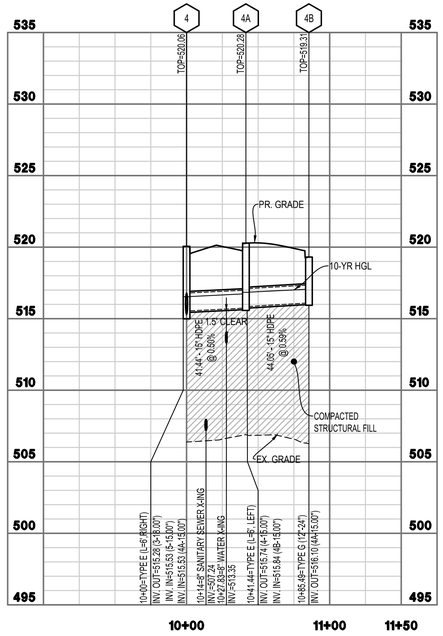

STRM 4-4B PROFILE
(SEE GRADING PLAN SHEET 45 FOR PLAN VIEW)

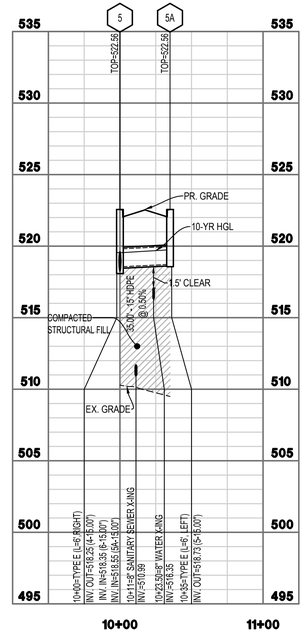

STRM 5-5A PROFILE
(SEE GRADING PLAN SHEET 45 FOR PLAN VIEW)

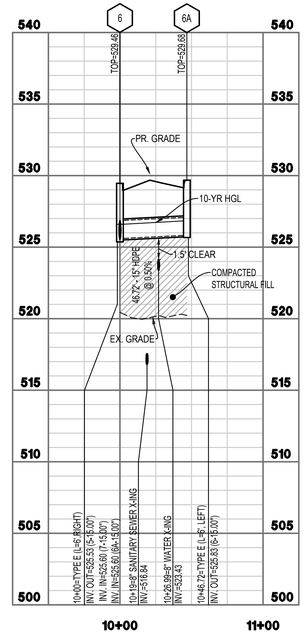

STRM 6-6A PROFILE
(SEE GRADING PLAN SHEET 45 FOR PLAN VIEW)

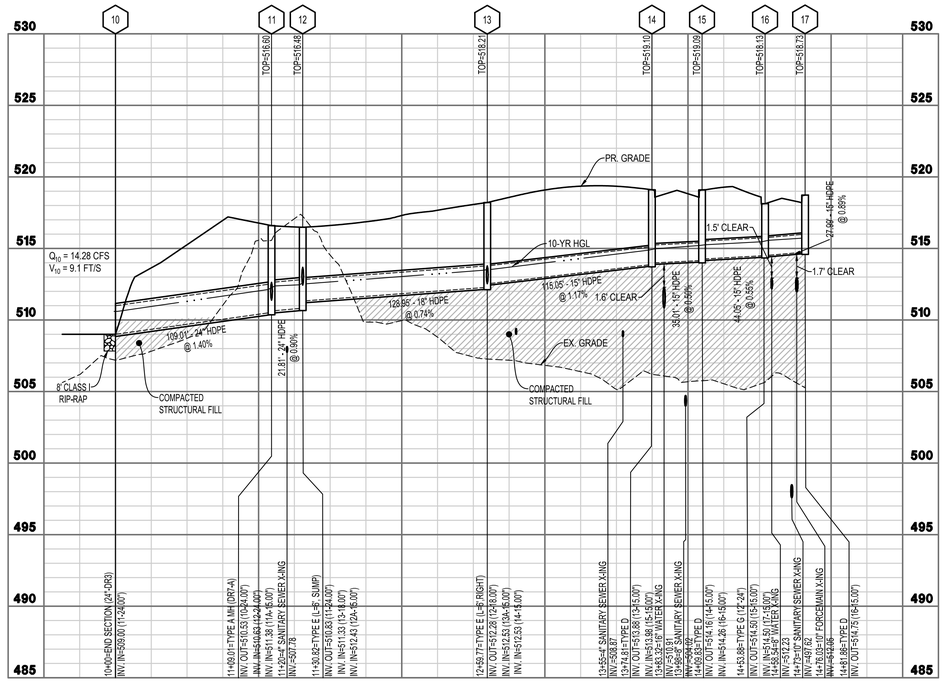

STRM 10-17 PROFILE
(SEE GRADING PLAN SHEET 45 FOR PLAN VIEW)

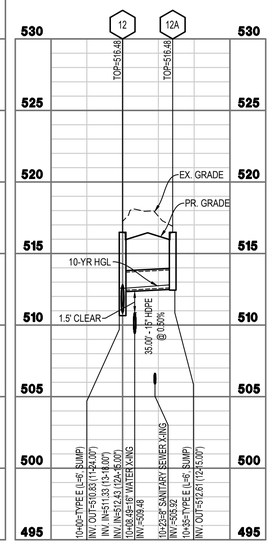

STRM 12-12B PROFILE
(SEE GRADING PLAN SHEET 45 FOR PLAN VIEW)

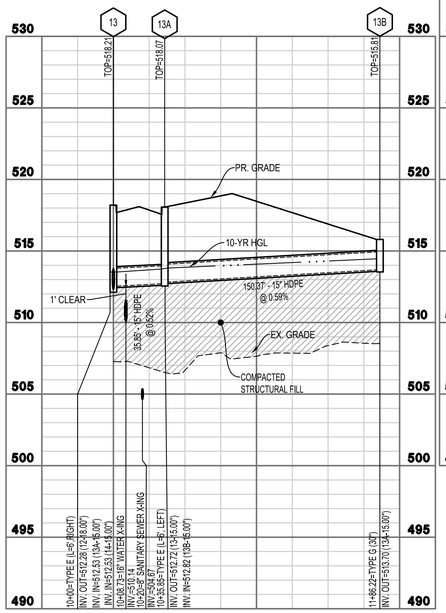

STRM 13-13B PROFILE
(SEE GRADING PLAN SHEET 45 FOR PLAN VIEW)

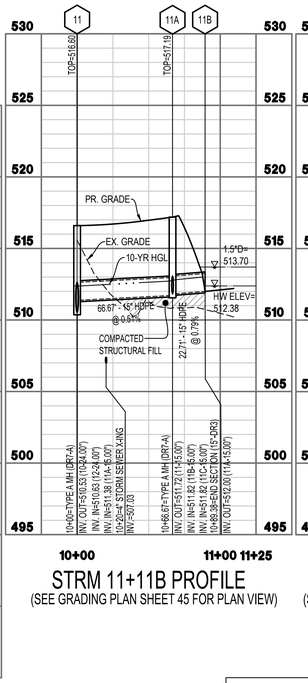

STRM 11+11B PROFILE
(SEE GRADING PLAN SHEET 45 FOR PLAN VIEW)

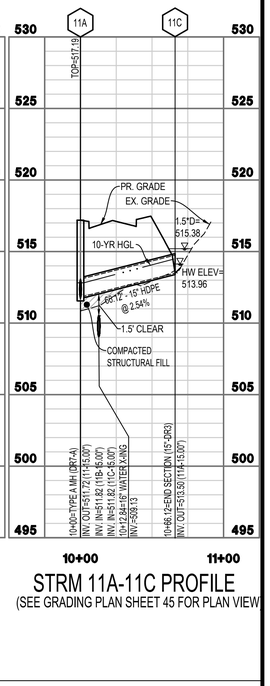

STRM 11A-11C PROFILE
(SEE GRADING PLAN SHEET 45 FOR PLAN VIEW)

INTEGRITY
FEDERAL SERVICES
CIVIL ENGINEERING • LANDSCAPE ARCHITECTURE • PLANNING
148 S. Queen Street, Suite 201 • Phone: 304-725-8456
Martinsburg, WV 25401 • www.ifs-se.com

SEAL:

JASON P. GERMAN — No. 19127 — STATE OF WEST VIRGINIA — PROFESSIONAL ENGINEER

REVISIONS

1. 10/23/2024 - JEFFERSON COUNTY, WVDOH, CTUB, AND DVAW COMMENTS
2. 12/13/2024 - JEFFERSON COUNTY AND CTUB PUMP STATION COMMENTS

STORM SEWER PROFILES

BIRDHILL MEADOWS SUBDIVISION PHASE 1

TAX MAP 3, PARCEL 29; D.B. 1291, PG. 381
MIDDLEWAY TAX DISTRICT
JEFFERSON COUNTY, WEST VIRGINIA

J.C. FILE #24-12-SD

SCALE:	HORIZ.: 1"=50' VERT.: 1"=5'
DATE:	JULY 2024
JOB:	3568-0301
DRAWN: JMM	CHECK: JPG
CADD: C-CU-261.DWG	
NCS:	
SHEET:	118 OF 147

0 2.5 5 10 15
VERTICAL SCALE: 1"=5'
50 25 0 50 100 150
GRAPHICAL SCALE: 1"=50'

FILENAME: S:\PROJECTS\3568\3568-0301 BIRDHILL PHASE 1 ENGINEERING\CAD\C-CU-261.DWG
COPYRIGHT © 2024 INTEGRITY FEDERAL SERVICES, LLC. ALL RIGHTS RESERVED. THIS DRAWING IS THE PROPERTY OF INTEGRITY FEDERAL SERVICES, LLC. NO REPRODUCTION OR USE OF THIS DRAWING IN WHOLE OR IN PART OR IN CONJUNCTION WITH ANY OTHER DRAWINGS WITHOUT THE EXPRESS WRITTEN PERMISSION OF INTEGRITY FEDERAL SERVICES, LLC IS PROHIBITED.

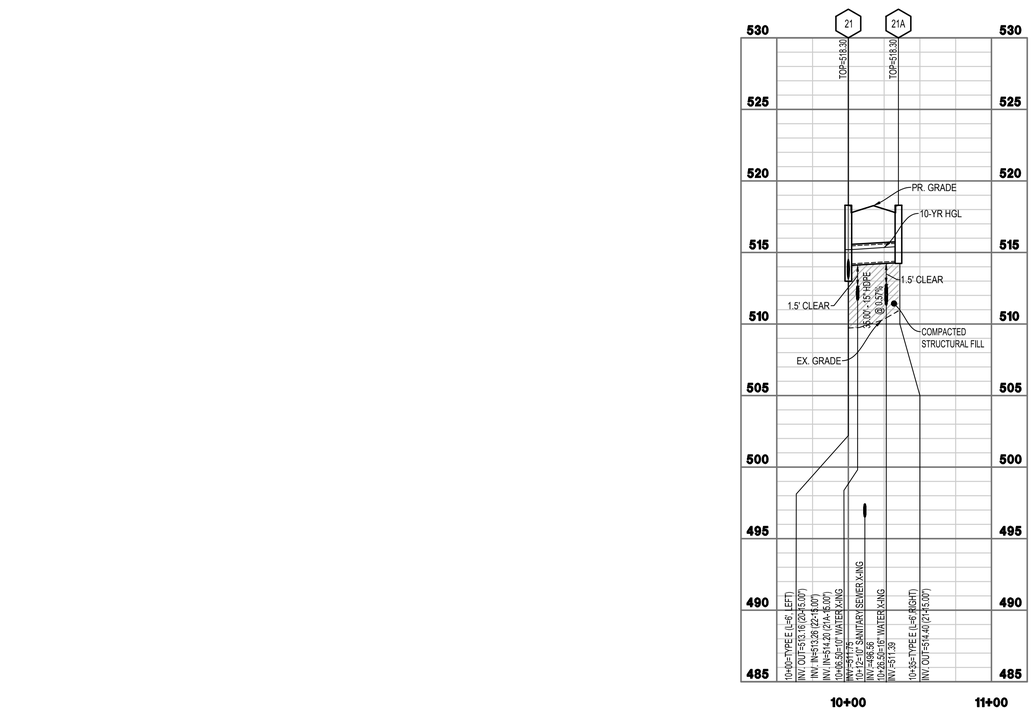

STRM 21-21A PROFILE
(SEE GRADING PLAN SHEET 46 FOR PLAN VIEW)

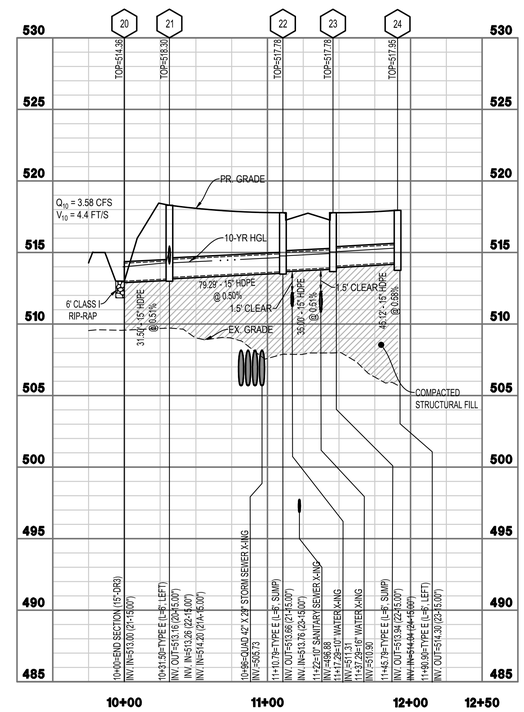

STRM 20-23 PROFILE
(SEE GRADING PLAN SHEET 46 FOR PLAN VIEW)

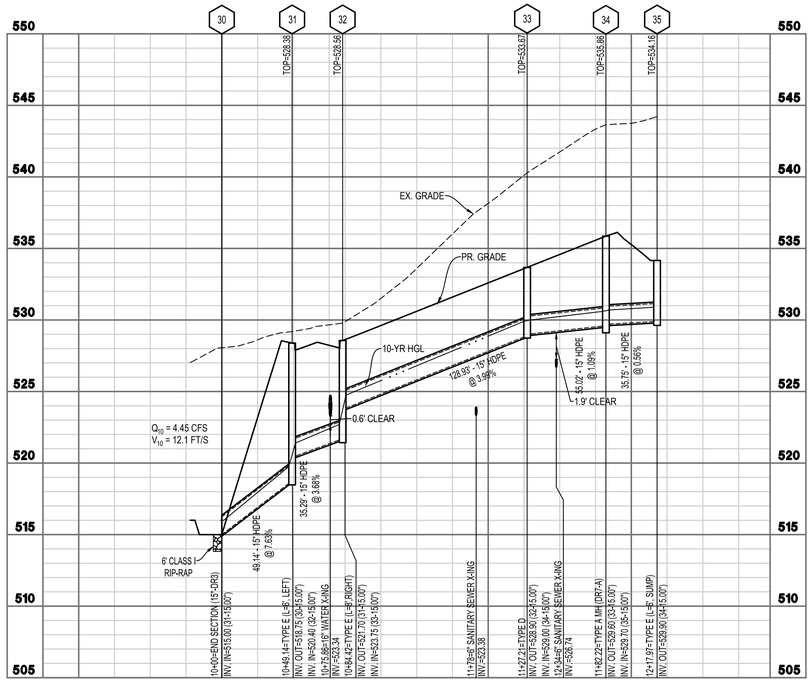

STRM 30-35 PROFILE
(SEE GRADING PLAN SHEET 46 FOR PLAN VIEW)

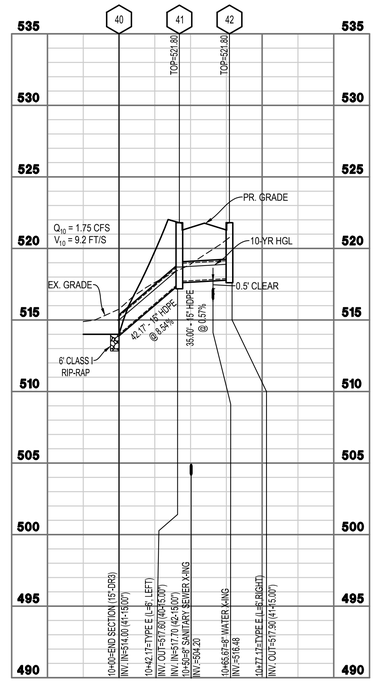

STRM 40-42 PROFILE
(SEE GRADING PLAN SHEET 46 FOR PLAN VIEW)

0 2.5 5 10 15
VERTICAL SCALE: 1"=5'
50 25 0 50 100 150
GRAPHICAL SCALE: 1"=50'

INTEGRITY
FEDERAL SERVICES
CIVIL ENGINEERING • LANDSCAPE ARCHITECTURE • PLANNING
148 S. Queen Street, Suite 201 • Phone: 304-725-8456
Martinsburg, WV 25401 • www.ifs-ae.com

JASON P. GERHART
REGISTERED
No. 19127
STATE OF
WEST VIRGINIA
PROFESSIONAL ENGINEER
12-13-24

SEAL:

REVISIONS

1. 10/23/2024 - JEFFERSON COUNTY, WVDOH, CTUB, AND WVAW COMMENTS
2. 12/13/2024 - JEFFERSON COUNTY AND CTUB PUMP STATION COMMENTS

STORM SEWER PROFILES

BIRDHILL MEADOWS SUBDIVISION PHASE 1

TAX MAP 3, PARCEL 29; D.B. 1291, PG. 381
MIDDLEWAY TAX DISTRICT
JEFFERSON COUNTY, WEST VIRGINIA

J.C. FILE #24-12-SD

SCALE:	HORIZ.: 1"=50' VERT.: 1"=5'
DATE:	JULY 2024
JOB:	3568-0301
DRAWN: JMM	CHECK: JPG
CADD: C-CU-261.DWG	
NCS:	
SHEET:	119 OF 147

FILEPATH: Z:\PROJECTS\ONEIDA,1998.001 SALUDA PROPERTY\PHASE 1\ENGINEER\CAD\C-CU-261.DWG
CONTRACT NOTICE: THIS DRAWING IS THE PROPERTY OF INTEGRITY FEDERAL SERVICES, INC. AND IS NOT TO BE USED FOR ANY PURPOSE EITHER DIRECTLY OR INDIRECTLY IN CONNECTION WITH THIS PROJECT WITHOUT THE WRITTEN PERMISSION OF INTEGRITY FEDERAL SERVICES, INC. (10/13/2021)

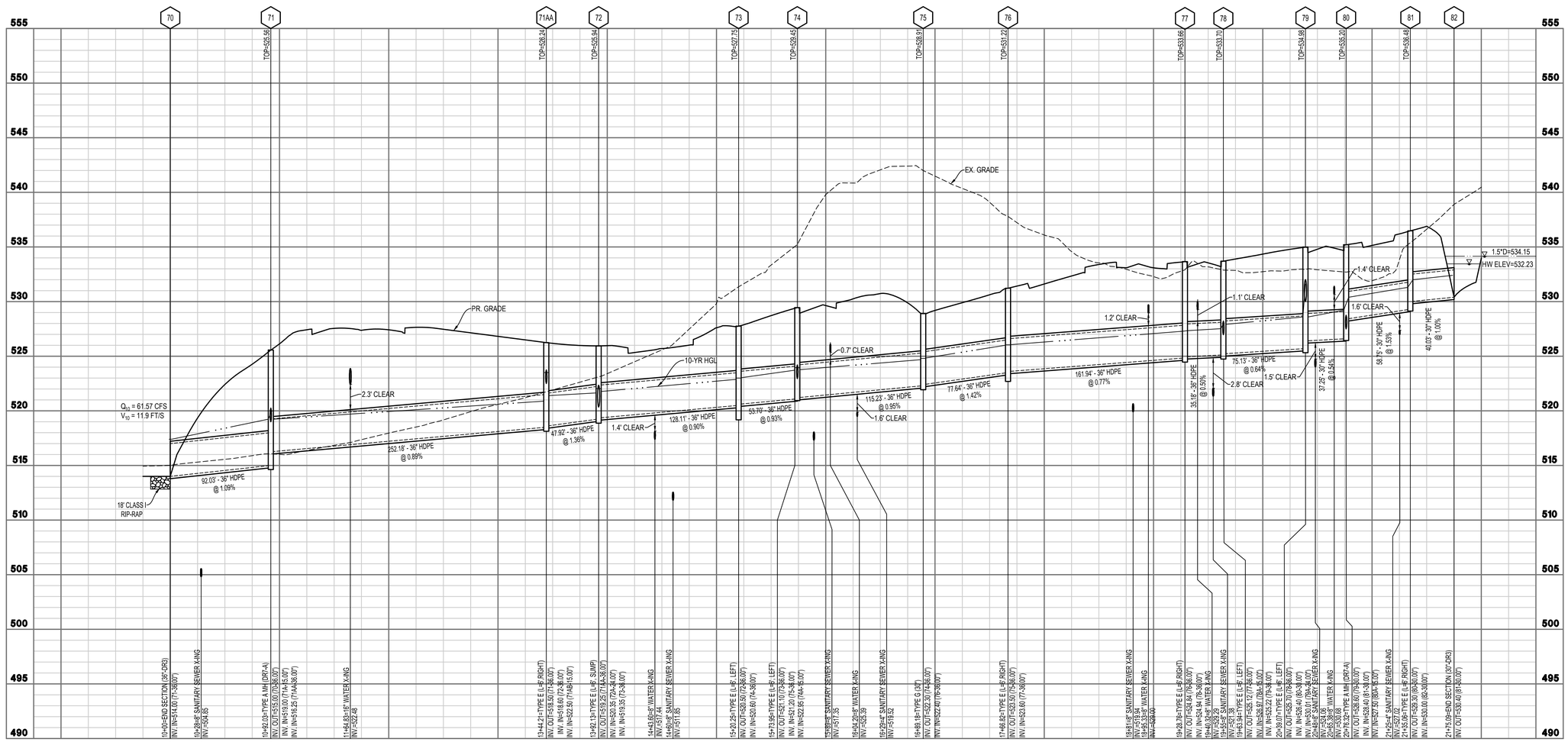

STRM 70-82 PROFILE

(SEE GRADING PLAN SHEETS 46 & 47 FOR PLAN VIEW)

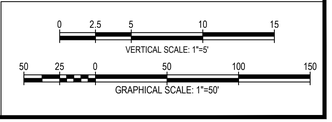

INTEGRITY
FEDERAL SERVICES
CIVIL ENGINEERING • LANDSCAPE ARCHITECTURE • PLANNING
148 S. Queen Street, Suite 201 • Phone: 304-725-8456
Martinsburg, WV 25401 • www.ifs-se.com

JASON P. GERHART
REGISTERED
No. 19127
STATE OF
WEST VIRGINIA
PROFESSIONAL ENGINEER
12-13-24

SEAL:

REVISIONS

1. 10/23/2024 - JEFFERSON COUNTY, WVDOH, CTUB, AND WVAW COMMENTS
2. 12/13/2024 - JEFFERSON COUNTY AND CTUB PUMP STATION COMMENTS

STORM SEWER PROFILES

BIRDHILL MEADOWS SUBDIVISION PHASE 1

TAX MAP 3, PARCEL 29, D.B. 1291, PG. 381
MIDDLEWAY TAX DISTRICT
JEFFERSON COUNTY, WEST VIRGINIA

J.C. FILE #24-12-SD

SCALE:	HORIZ.: 1"=50' VERT.: 1"=5'
DATE:	JULY 2024
JOB:	3568-0301
DRAWN: JMM	CHECK: JPG
CADD: C-CU-261.DWG	
NCS:	
SHEET:	120 OF 147

FILENAME: Q:\PROJECTS\3568.0301 MILLER PROPERTY\PHASE 1\ENGINEER\CAD\C-CU-261.DWG
COPYRIGHT © 2024 INTEGRITY FEDERAL SERVICES, LLC
ALL RIGHTS RESERVED. NO PART OF THIS DRAWING MAY BE REPRODUCED OR TRANSMITTED IN ANY FORM OR BY ANY MEANS, ELECTRONIC OR MECHANICAL, INCLUDING PHOTOCOPYING, RECORDING, OR BY ANY INFORMATION STORAGE AND RETRIEVAL SYSTEM WITHOUT THE PRIOR WRITTEN PERMISSION OF INTEGRITY FEDERAL SERVICES, LLC.

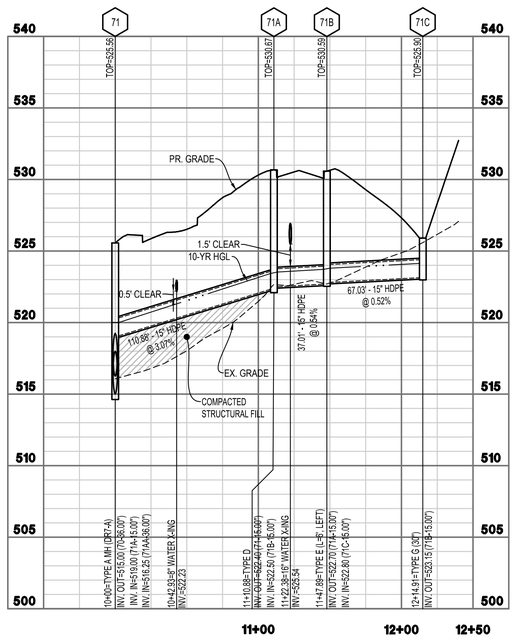

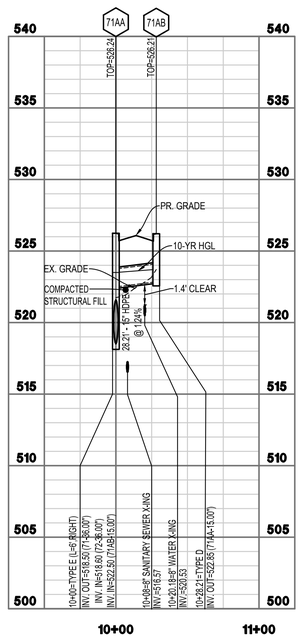

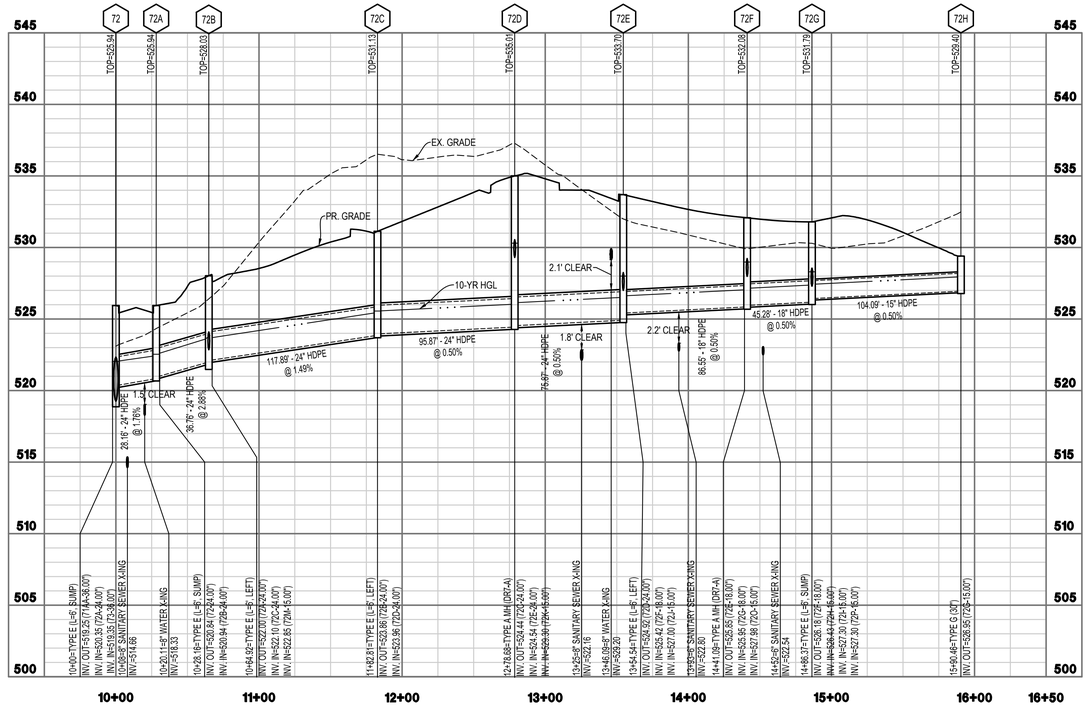

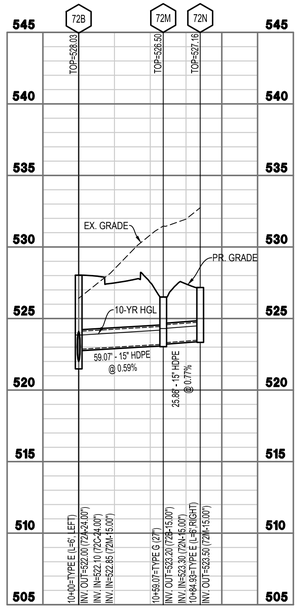

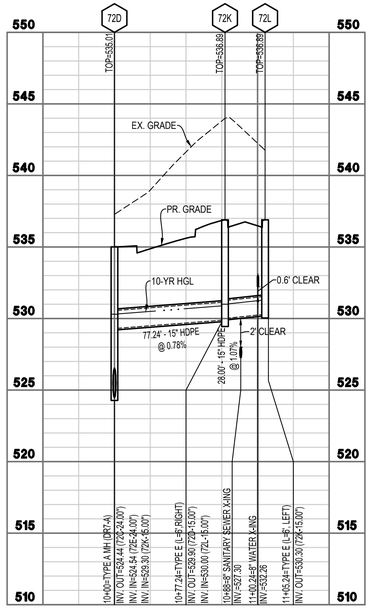

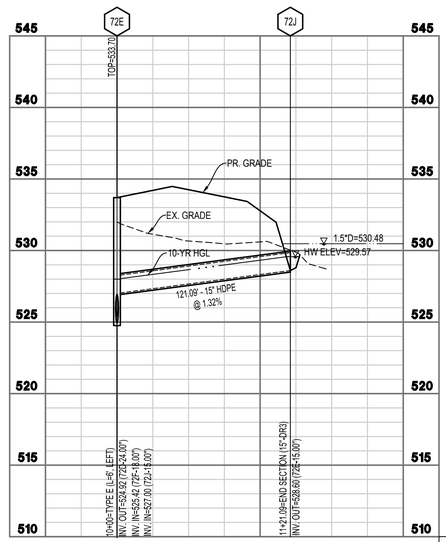

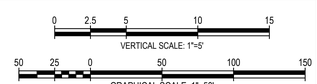

INTEGRITY
FEDERAL SERVICES
CIVIL ENGINEERING • LANDSCAPE ARCHITECTURE • PLANNING
148 S. Queen Street, Suite 201 • Phone: 304-725-8456
Martinsburg, WV 25401 • www.ifs-se.com

SEAL:

JASON P. GERMAN
REGISTERED
No. 19127
STATE OF
WEST VIRGINIA
PROFESSIONAL ENGINEER
12-17-24
3-13-25

REVISIONS

1. 10/23/2024 - JEFFERSON COUNTY, WVDOH, CTUB, AND WVAW COMMENTS
2. 12/13/2024 - JEFFERSON COUNTY AND CTUB PUMP STATION COMMENTS

STORM SEWER PROFILES

BIRDHILL MEADOWS SUBDIVISION PHASE 1

TAX MAP 3, PARCEL 29; D.B. 1291, PG. 381
MIDDLEWAY TAX DISTRICT
JEFFERSON COUNTY, WEST VIRGINIA

J.C. FILE #24-12-SD

SCALE:	HORIZ.: 1"=50' VERT.: 1"=5'
DATE:	JULY 2024
JOB:	3568-0301
DRAWN: JMM	CHECK: JPG
CADD: C-CU-261.DWG	
NCS:	
SHEET:	121 OF 147

FILE PATH: S:\PROJECTS\CONCEPTUAL\3568-0301 MILLER PROPERTY\PHASE 1\ENGINEER\CAD\C-CU-261.DWG
COPYRIGHT © 2024 INTEGRITY FEDERAL SERVICES, LLC
NO REPRODUCTION OR USE OF THIS DRAWING IN ANY FORM OR MEDIUM, BY ANY PROCESS WHATSOEVER, WITHOUT WRITTEN PERMISSION FROM INTEGRITY FEDERAL SERVICES, LLC

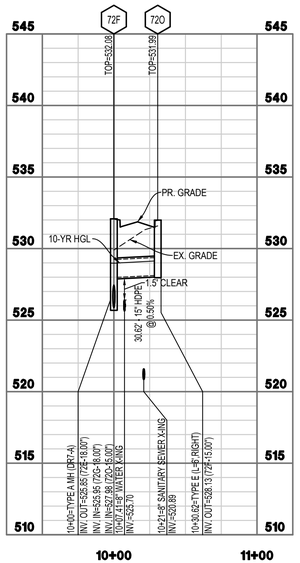

STRM 72F-72O PROFILE
(SEE GRADING PLAN SHEET 47 FOR PLAN VIEW)

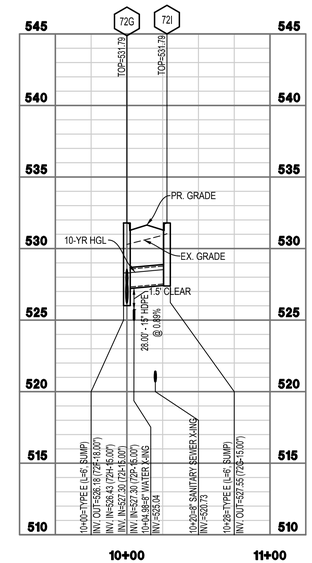

STRM 72G-72I PROFILE
(SEE GRADING PLAN SHEET 47 FOR PLAN VIEW)

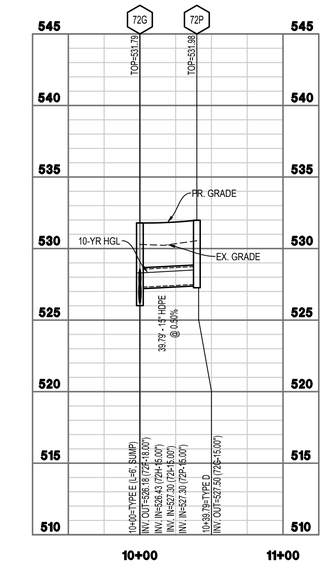

STRM 72G-72P PROFILE
(SEE GRADING PLAN SHEET 47 FOR PLAN VIEW)

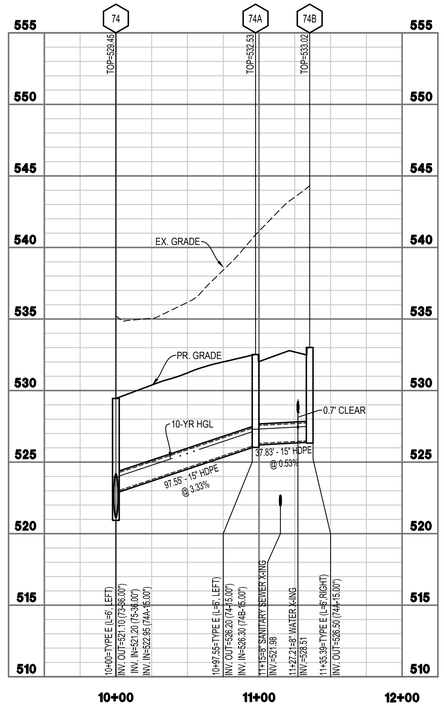

STRM 74-74B PROFILE
(SEE GRADING PLAN SHEET 47 FOR PLAN VIEW)

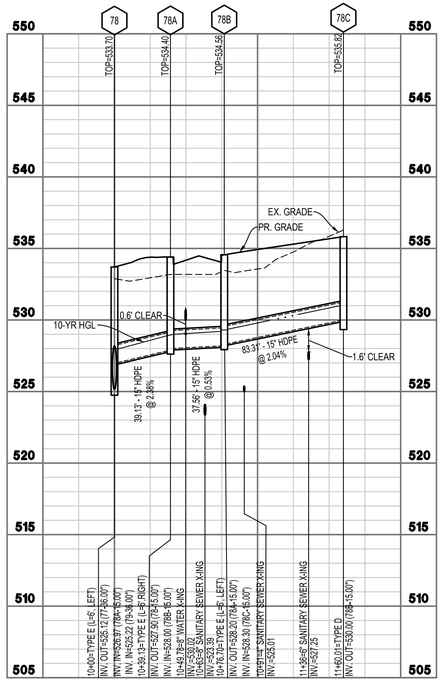

STRM 78-78C PROFILE
(SEE GRADING PLAN SHEET 47 FOR PLAN VIEW)

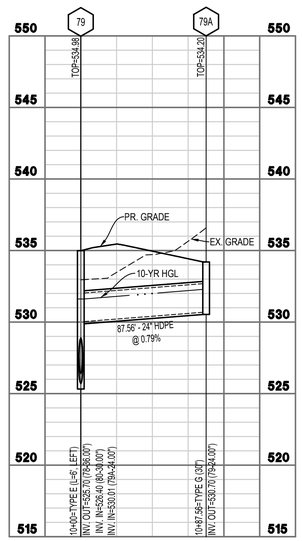

STRM 79-79A PROFILE
(SEE GRADING PLAN SHEET 47 FOR PLAN VIEW)

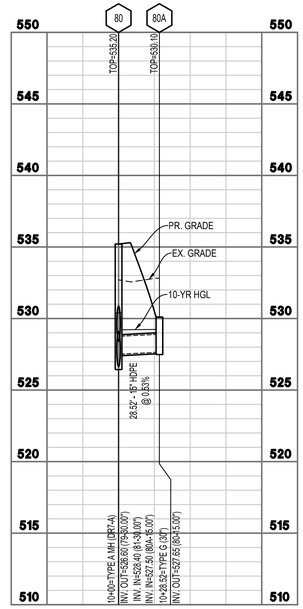

STRM 80-80A PROFILE
(SEE GRADING PLAN SHEET 47 FOR PLAN VIEW)

INTEGRITY
FEDERAL SERVICES
CIVIL ENGINEERING • LANDSCAPE ARCHITECTURE • PLANNING
148 S. Queen Street, Suite 201 • Phone: 304-725-8456
Martinsburg, WV 25401 • www.ifs-ae.com

SEAL:

JASON P. GERMAN
REGISTERED
No. 19127
STATE OF
WEST VIRGINIA
PROFESSIONAL ENGINEER
12-13-24

REVISIONS

1. 10/23/2024 - JEFFERSON COUNTY, WVDOH, CTUB, AND WVAW COMMENTS
2. 12/13/2024 - JEFFERSON COUNTY AND CTUB PUMP STATION COMMENTS

STORM SEWER PROFILES

BIRDHILL MEADOWS SUBDIVISION PHASE 1

TAX MAP 3, PARCEL 29; D.B. 1291, PG. 381
MIDDLEWAY TAX DISTRICT
JEFFERSON COUNTY, WEST VIRGINIA

J.C. FILE #24-12-SD

SCALE:	HORIZ.: 1"=50' VERT.: 1"=5'
DATE:	JULY 2024
JOB:	3568-0301
DRAWN:	JMM
CHECK:	JPG
CADD:	C-CU-261.DWG
NCS:	
SHEET:	122 OF 147

0 2.5 5 10 15
VERTICAL SCALE: 1"=5'
50 25 0 50 100 150
GRAPHICAL SCALE: 1"=50'

FILEPATH: S:\PROJECTS\ORIGINAL\3568-0301 MILLER PROPERTY\PHASE 1\ENGINEER\CAD\C-CU-261.DWG
COPYRIGHT © 2024 INTEGRITY FEDERAL SERVICES, LLC. ALL RIGHTS RESERVED. NO PART OF THIS PRODUCT MAY BE REPRODUCED, STORED IN A RETRIEVAL SYSTEM OR TRANSMITTED IN ANY FORM OR BY ANY MEANS, ELECTRONIC, MECHANICAL, PHOTOCOPYING, RECORDING OR OTHERWISE, WITHOUT THE PRIOR WRITTEN PERMISSION OF INTEGRITY FEDERAL SERVICES, LLC.

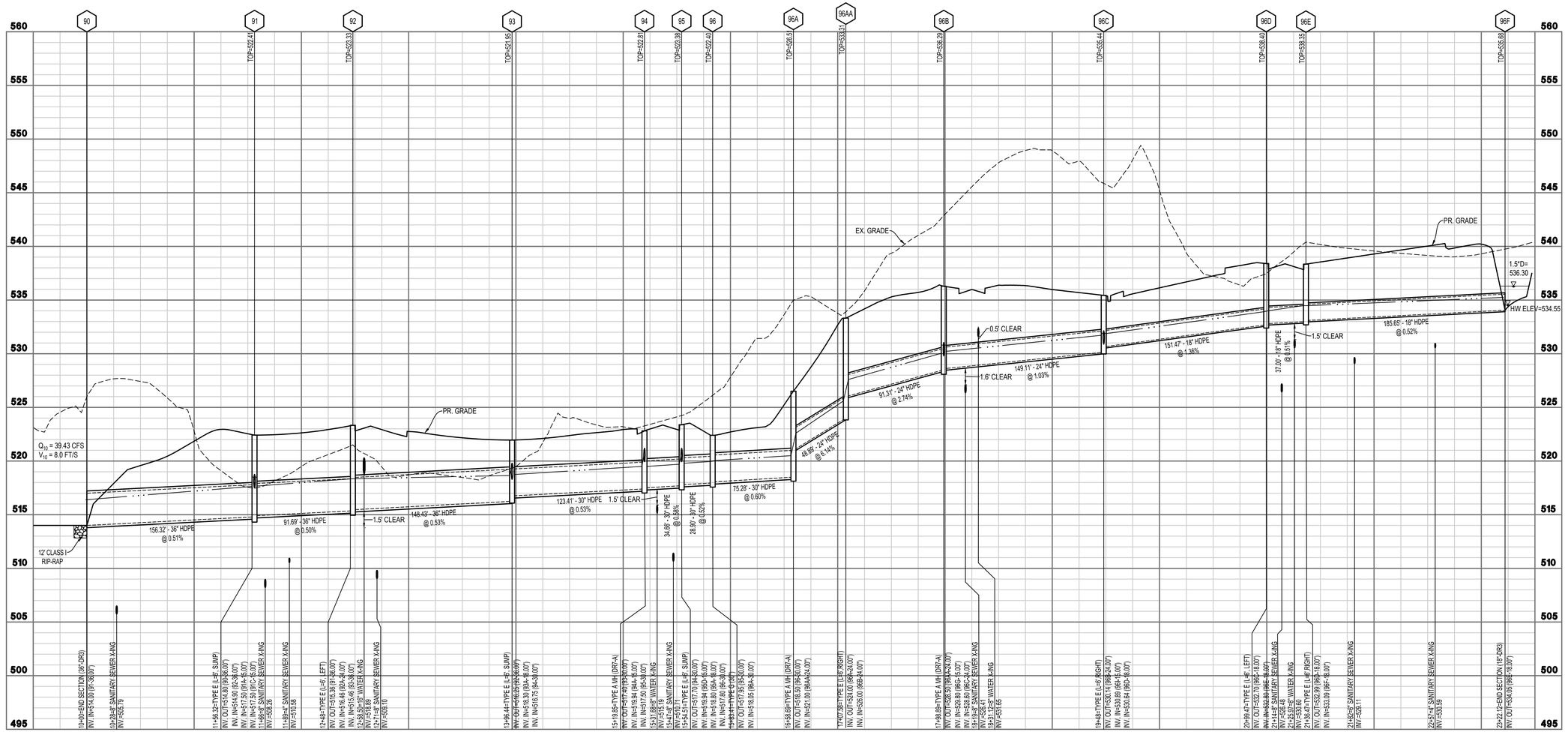

STRM 90-96F PROFILE

(SEE GRADING PLAN SHEETS 50, 51, 47, & 48 FOR PLAN VIEW)

INTEGRITY FEDERAL SERVICES

CIVIL ENGINEERING • LANDSCAPE ARCHITECTURE • PLANNING

148 S. Queen Street, Suite 201 • Phone: 304-725-8456
Martinsburg, WV 25401 • www.ifs-se.com

SEAL:

JASON P. GERHART — REGISTERED — No. 19127 — STATE OF WEST VIRGINIA — PROFESSIONAL ENGINEER — 10-13-24

REVISIONS

1: 10/23/2024 - JEFFERSON COUNTY, WVDOH, CTUB, AND WVAW COMMENTS
2: 12/13/2024 - JEFFERSON COUNTY AND CTUB PUMP STATION COMMENTS

STORM SEWER PROFILES

BIRDHILL MEADOWS SUBDIVISION PHASE 1

TAX MAP 3, PARCEL 29; D.B. 1291, PG. 381
MIDDLEWAY TAX DISTRICT
JEFFERSON COUNTY, WEST VIRGINIA

J.C. FILE #24-12-SD

SCALE:	HORIZ.: 1"=50' VERT.: 1"=5'
DATE:	JULY 2024
JOB:	3568-0301
DRAWN: JMM	CHECK: JPG
CADD: C-CU-261.DWG	
NCS:	
SHEET:	123 OF 147

VERTICAL SCALE: 1"=5'
GRAPHICAL SCALE: 1"=50'

FILENAME: Z:\PROJECTS\3568-0301 MILLER PROPERTY\PHASE 1\ENGINEERING\CU\C-CU-261.DWG
COPYRIGHT © 2024 INTEGRITY FEDERAL SERVICES, LLC. ALL RIGHTS RESERVED. THIS DRAWING IS PROTECTED BY COPYRIGHT LAW AND MAY NOT BE REPRODUCED, DISTRIBUTED, TRANSMITTED, DISPLAYED, PUBLISHED OR USED IN ANY WAY WITHOUT THE PRIOR WRITTEN PERMISSION OF INTEGRITY FEDERAL SERVICES, LLC.

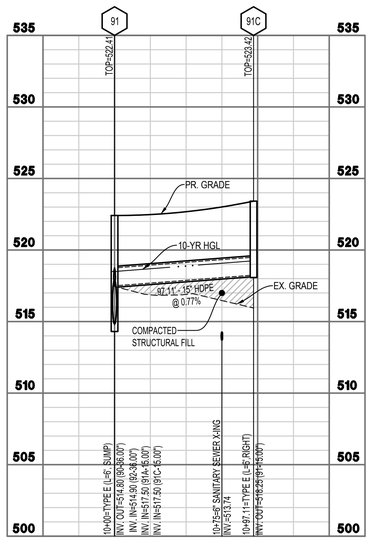

STRM 91-91C PROFILE
(SEE GRADING PLAN SHEETS 50 & 46 FOR PLAN VIEW)

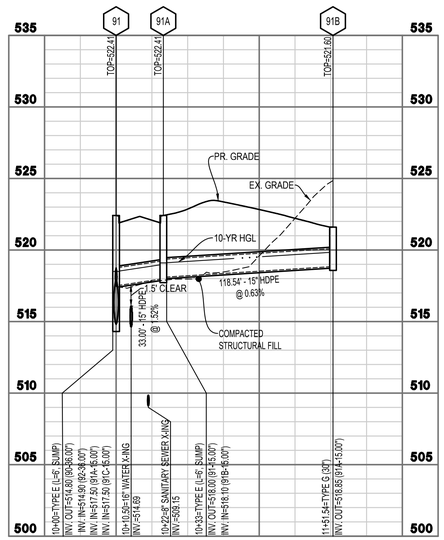

STRM 91-91B PROFILE
(SEE GRADING PLAN SHEETS 50 & 51 FOR PLAN VIEW)

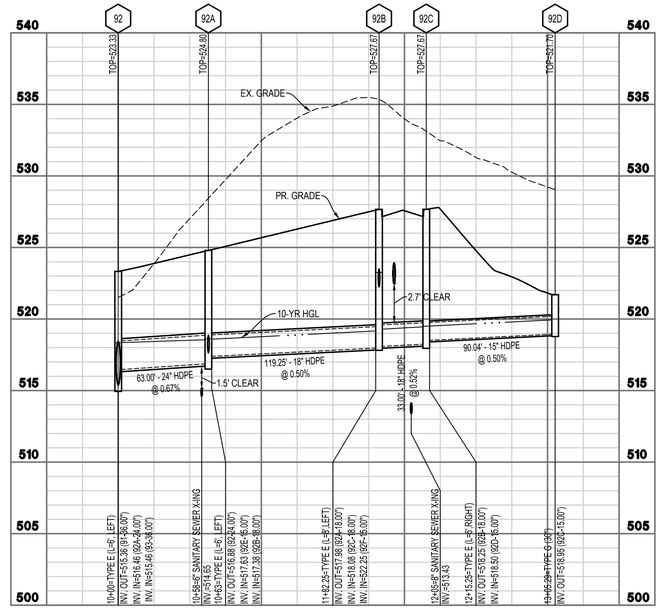

STRM 92-92D PROFILE
(SEE GRADING PLAN SHEETS 50 & 51 FOR PLAN VIEW)

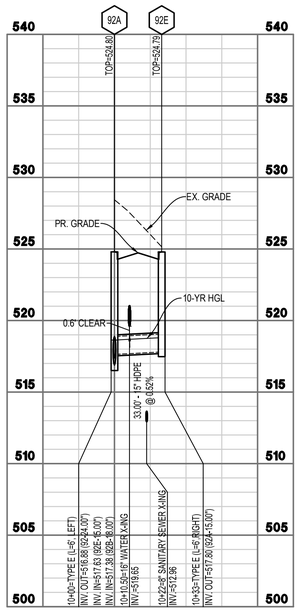

STRM 92A-92E PROFILE
(SEE GRADING PLAN SHEET 50 FOR PLAN VIEW)

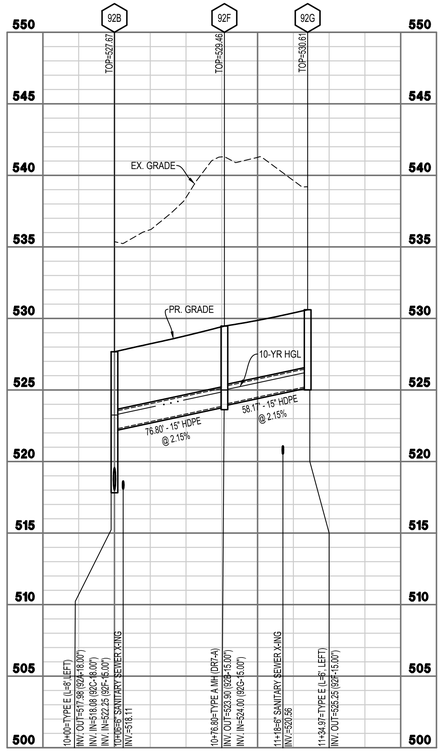

STRM 92B-92G PROFILE
(SEE GRADING PLAN SHEETS 50 & 51 FOR PLAN VIEW)

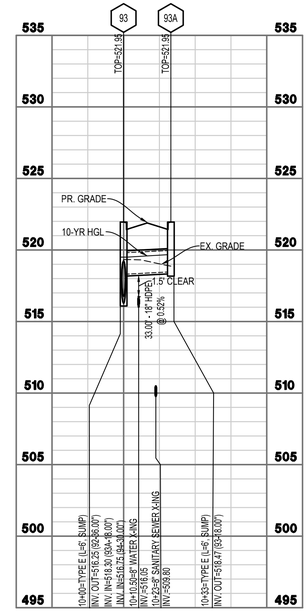

STRM 93-93A PROFILE
(SEE GRADING PLAN SHEET 51 FOR PLAN VIEW)

0 2.5 5 10 15
VERTICAL SCALE: 1"=5'

50 25 0 50 100 150
GRAPHICAL SCALE: 1"=50'

INTEGRITY
FEDERAL SERVICES
CIVIL ENGINEERING • LANDSCAPE ARCHITECTURE • PLANNING
148 S. Queen Street, Suite 201 • Phone: 304-725-8456
Martinsburg, WV 25401 • www.ifs-se.com

SEAL:
JASON P. GERHART
REGISTERED
No. 19127
STATE OF
WEST VIRGINIA
PROFESSIONAL ENGINEER
10-13-24

REVISIONS
1. 10/23/2024 - JEFFERSON COUNTY, WVDOH, CTUB, AND WVAW COMMENTS
2. 12/13/2024 - JEFFERSON COUNTY AND CTUB PUMP STATION COMMENTS

STORM SEWER PROFILES

BIRDHILL MEADOWS SUBDIVISION PHASE 1
TAX MAP 3, PARCEL 29; D.B. 1291, PG. 381
MIDDLEWAY TAX DISTRICT
JEFFERSON COUNTY, WEST VIRGINIA

J.C. FILE #24-12-SD

SCALE:	HORIZ.: 1"=50' VERT.: 1"=5'
DATE:	JULY 2024
JOB:	3568-0301
DRAWN: JMM	CHECK: JPG
CADD: C-CU-261.DWG	
NCS:	
SHEET:	124 OF 147

FILE PATH: Z:\OFFICE\STORM\3568-0301 MIDLEWAY\PROPERTY PHASE 1\DRAWINGS\C-CU-261.DWG
DATE/TIME: 12/13/2024 2:58:27 PM
THE CONTENTS CONTAINED ON THIS SET OF PLANS/DRAWINGS IS THE PROPERTY OF INTEGRITY FEDERAL SERVICES AND IS NOT TO BE USED IN WHOLE OR IN PART FOR ANY PROJECTS OTHER THAN THE SPECIFIC PROJECT FOR WHICH IT WAS PREPARED BY INTEGRITY FEDERAL SERVICES (IFS) WITHOUT THE EXPRESSED WRITTEN CONSENT OF IFS.

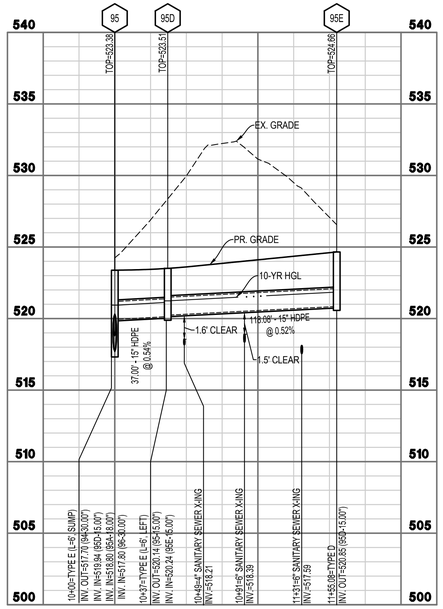

STRM 95-95E PROFILE
(SEE GRADING PLAN SHEETS 51 & 47 FOR PLAN VIEW)

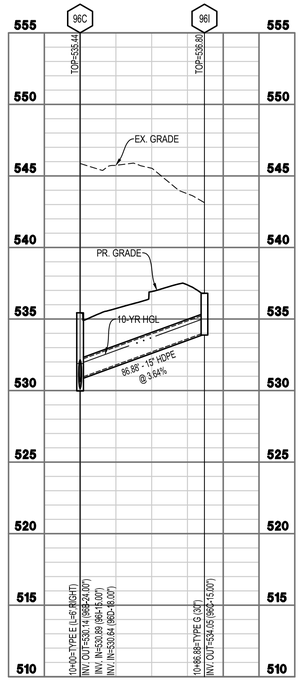

STRM 96C-96I PROFILE
(SEE GRADING PLAN SHEET 47 FOR PLAN VIEW)

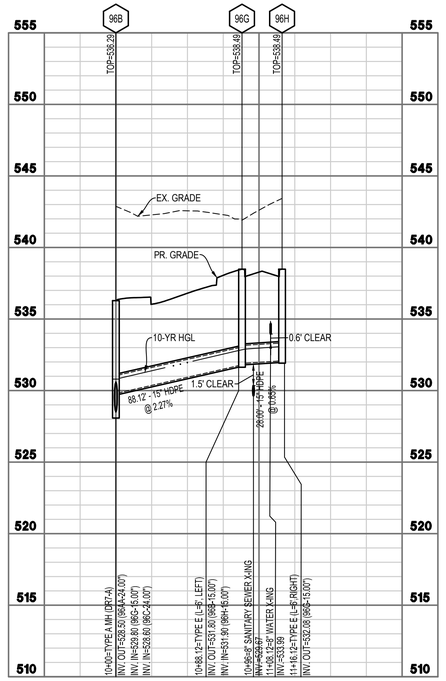

STRM 96B-96H PROFILE
(SEE GRADING PLAN SHEET 51 FOR PLAN VIEW)

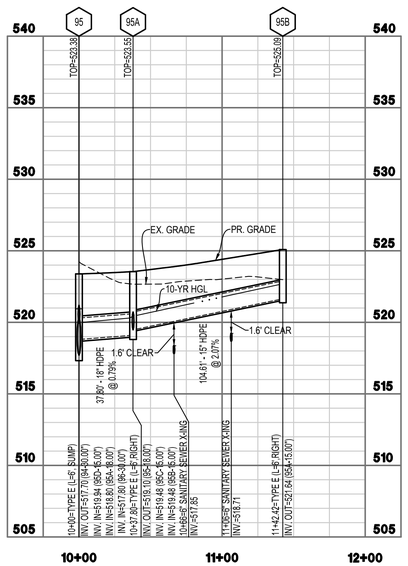

STRM 95-95B PROFILE
(SEE GRADING PLAN SHEET 51 FOR PLAN VIEW)

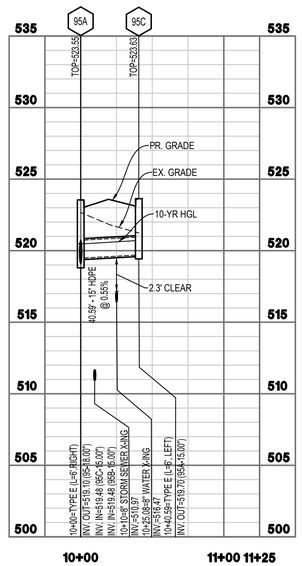

STRM 95A-95C PROFILE
(SEE GRADING PLAN SHEET 51 FOR PLAN VIEW)

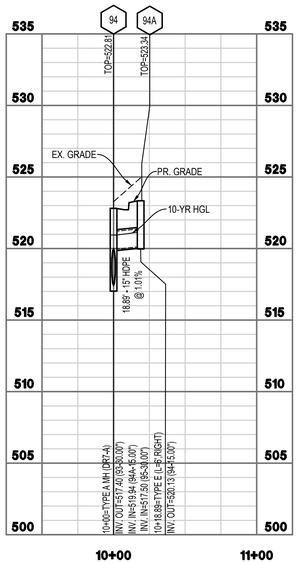

STRM 94-94A PROFILE
(SEE GRADING PLAN SHEET 51 FOR PLAN VIEW)

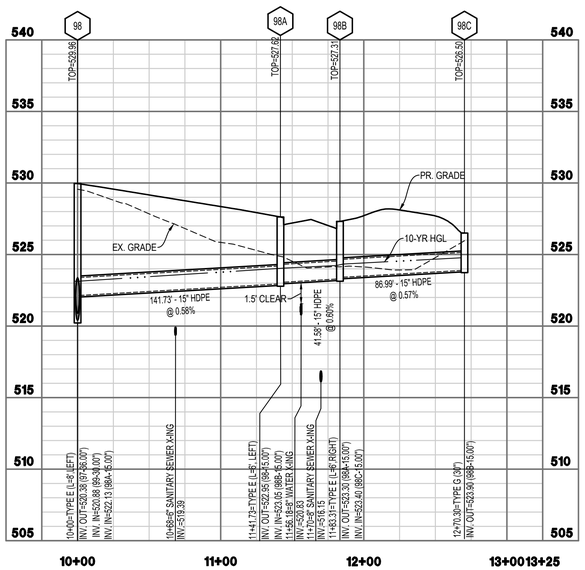

STRM 98-98C PROFILE
(SEE GRADING PLAN SHEET 51 FOR PLAN VIEW)

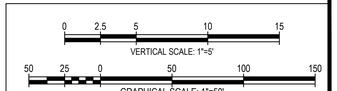

INTEGRITY
FEDERAL SERVICES
CIVIL ENGINEERING • LANDSCAPE ARCHITECTURE • PLANNING
148 S. Queen Street, Suite 201 • Phone: 304-725-8456
Martinsburg, WV 25401 • www.ifs-ae.com

SEAL:

JASON P. GERMAN
REGISTERED
No. 19127
STATE OF
WEST VIRGINIA
PROFESSIONAL ENGINEER
10-13-24

REVISIONS

1. 10/23/2024 - JEFFERSON COUNTY, WVDOH, CTUB, AND WVAW COMMENTS
2. 12/13/2024 - JEFFERSON COUNTY AND CTUB PUMP STATION COMMENTS

STORM SEWER PROFILES

BIRDHILL MEADOWS SUBDIVISION PHASE 1

TAX MAP 3, PARCEL 29; D.B. 1291, PG. 381
MIDDLEWAY TAX DISTRICT
JEFFERSON COUNTY, WEST VIRGINIA

J.C. FILE #24-12-SD

SCALE:	HORIZ.: 1"=50' VERT.: 1"=5'
DATE:	JULY 2024
JOB:	3568-0301
DRAWN:	JMM
CHECK:	JPG
CADD:	C-CU-261.DWG
NCS:	
SHEET:	125 OF 147

FILE PATH: Z:\PROJECTS\ENGINEERING\3568-0301 BALLER PROPERTY\PHASE 1\ENGINEERING\CU\C-CU-261.DWG
CAUTION!!! - DO NOT RELEASE THIS DRAWING TO ANYONE WITHOUT THE AUTHORIZATION OF INTEGRITY FEDERAL SERVICES. THIS DRAWING IS PROPRIETARY AND CONFIDENTIAL. ANY UNAUTHORIZED USE OF THIS DRAWING IS STRICTLY PROHIBITED. ©2024 INTEGRITY FEDERAL SERVICES. ALL RIGHTS RESERVED.

INTEGRITY
FEDERAL SERVICES
CIVIL ENGINEERING • LANDSCAPE ARCHITECTURE • PLANNING
148 S. Queen Street, Suite 201 • Phone: 304-725-8456
Martinsburg, WV 25401 • www.ifs-se.com

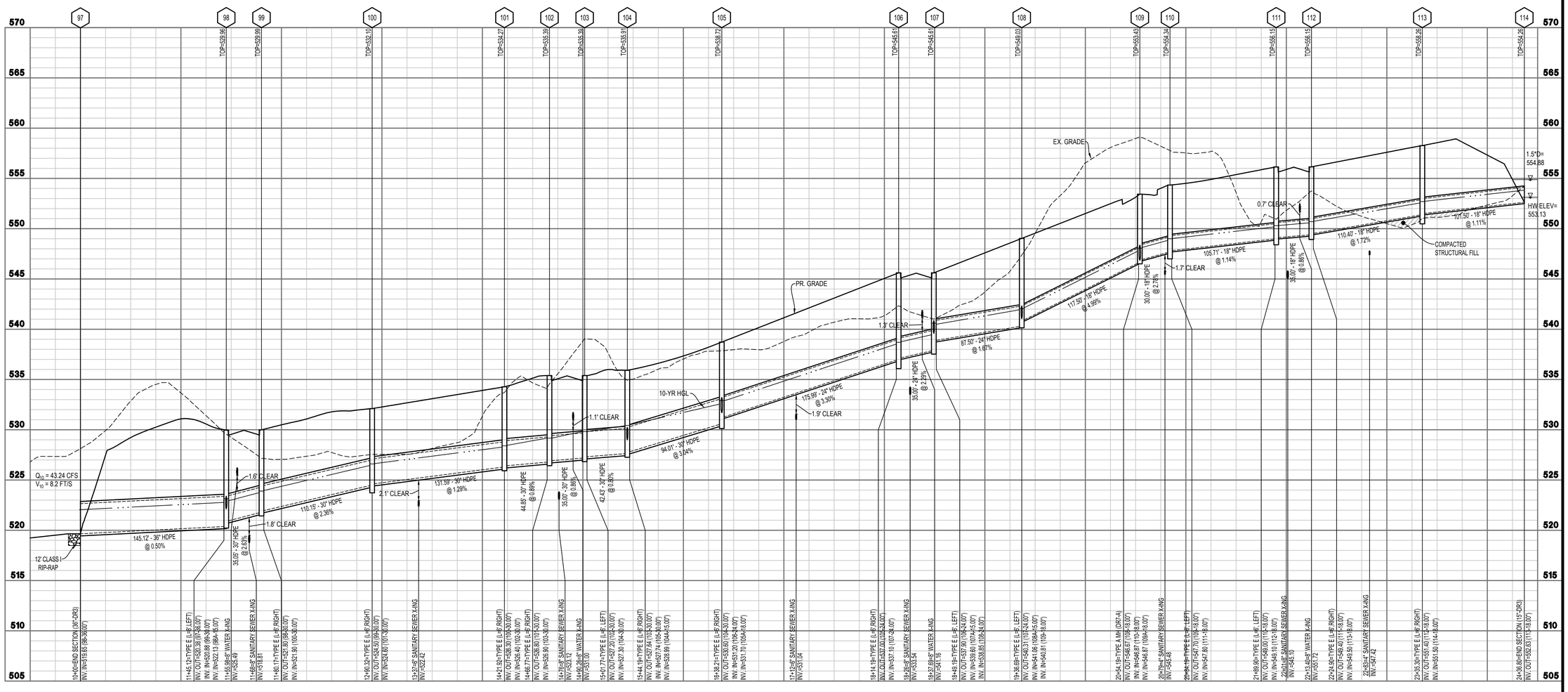

10+00-END SECTION (36"-CPEP)
INV.=519.65 (98-36.00')

11+45.12=TYPE E (L=9' LEFT)
INV.=520.38 (97-60.00')
INV.=520.89 (99-30.00')
INV.=522.13 (98A-15.00')
11+55.98=6" WATER X-ING
INV.=525.49
11+69.8=8" SANITARY SEWER X-ING
INV.=518.61
11+80.17=TYPE E (L=9' RIGHT)
INV.=527.80 (98-60.00')
INV.=521.90 (100-30.00')

12+80.32=TYPE E (L=9' RIGHT)
INV.=526.45 (98-60.00')
INV.=524.80 (101-30.00')

13+37.6"=8" SANITARY SEWER X-ING
INV.=522.42

14+21.92=TYPE E (L=9' RIGHT)
INV.=526.30 (100-30.00')
INV.=526.40 (102-30.00')
14+66.77=TYPE E (L=9' RIGHT)
INV.=526.80 (101-30.00')
INV.=526.90 (103-30.00')

14+76.8"=8" SANITARY SEWER X-ING
INV.=523.12
14+90.28=8" WATER X-ING
INV.=531.00

15+91.77=TYPE E (L=9' LEFT)
INV.=527.20 (102-30.00')
INV.=527.30 (104-30.00')

15+44.19=TYPE E (L=9' RIGHT)
INV.=527.64 (103-30.00')
INV.=527.74 (105-30.00')
INV.=528.89 (104A-15.00')

16+38.21=TYPE E (L=9' RIGHT)
INV.=530.60 (104-30.00')
INV.=531.20 (106-24.00')
INV.=531.70 (105A-18.00')

17+12=8" SANITARY SEWER X-ING
INV.=531.04

18+14.19=TYPE E (L=9' RIGHT)
INV.=537.00 (105-24.00')
INV.=537.10 (107-24.00')

18+26=8" SANITARY SEWER X-ING
INV.=533.54

18+37.69=8" WATER X-ING
INV.=541.16

18+48.19=TYPE E (L=9', LEFT)
INV.=537.50 (106-24.00')
INV.=539.80 (107A-15.00')
INV.=538.85 (108-24.00')

19+36.09=TYPE E (L=9', LEFT)
INV.=540.31 (107-24.00')
INV.=540.41 (108A-15.00')
INV.=540.81 (109-18.00')

20+54.19=TYPE A MH (DRT-A)
INV. OUT=506.67 (109-18.00')
INV. IN=546.87 (110-18.00')
INV. IN=546.87 (109A-18.00')

20+79=4" SANITARY SEWER X-ING
INV.=545.48

20+84.19=TYPE E (L=9', LEFT)
INV. OUT=547.70 (109-18.00')
INV.=547.80 (111-18.00')

21+89.90=TYPE E (L=9', LEFT)
INV. OUT=506.00 (110-18.00')
INV. IN=548.10 (112-18.00')

22+13.40=8" WATER X-ING
INV.=551.72

22+24.38=TYPE E (L=9' RIGHT)
INV. OUT=548.40 (111-18.00')
INV. IN=548.50 (113-18.00')

22+83=4" SANITARY SEWER X-ING
INV.=547.42

23+35.39=TYPE E (L=9' RIGHT)
INV. OUT=551.40 (112-18.00')
INV. IN=551.50 (114-18.00')

24+56.80=END SECTION (15"-CPEP)
INV. OUT=552.63 (113-18.00')

STRM 97-114 PROFILE
(SEE GRADING PLAN SHEETS 51, 52 & 55 FOR PLAN VIEW)

VERTICAL SCALE: 1"=5'
GRAPHICAL SCALE: 1"=50'

SEAL:

REVISIONS
1. 10/23/2024 - JEFFERSON COUNTY, WVDOH, CTUB, AND WVAW COMMENTS
2. 12/13/2024 - JEFFERSON COUNTY AND CTUB PUMP STATION COMMENTS

STORM SEWER PROFILES

BIRDHILL MEADOWS SUBDIVISION PHASE 1

TAX MAP 3, PARCEL 29; D.B. 1291, PG. 381
MIDDLEWAY TAX DISTRICT
JEFFERSON COUNTY, WEST VIRGINIA

J.C. FILE #24-12-SD

SCALE:	HORIZ.: 1"=50' VERT.: 1"=5'
DATE:	JULY 2024
JOB:	3568-0301
DRAWN: JMM	CHECK: JPG
CADD: C-CU-261.DWG	
NCS:	
SHEET:	126 OF 147

FILE PATH: Z:\PROJECTS\3568\3568.0301 BIRLER PROPERTY\PHASE 1\ENGINEERING\CAD\C-CU-261.DWG
COPYRIGHT © 2024 INTEGRITY FEDERAL SERVICES
NO REPRODUCTION OR USE OF THIS DRAWING IN ALTERED FORM OR IN PART, BY ANY PROCESS OR MEANS, WRITTEN AUTHORIZATION FROM INTEGRITY FEDERAL SERVICES IS PROHIBITED.

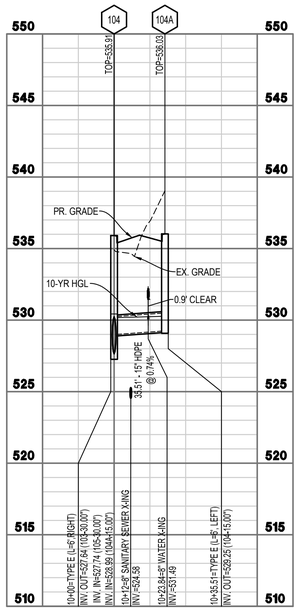

STRM 104-104A PROFILE
(SEE GRADING PLAN SHEET 52 FOR PLAN VIEW)

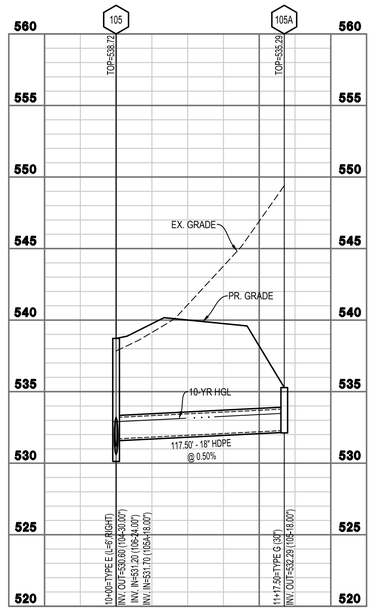

STRM 105-105A PROFILE
(SEE GRADING PLAN SHEET 52 FOR PLAN VIEW)

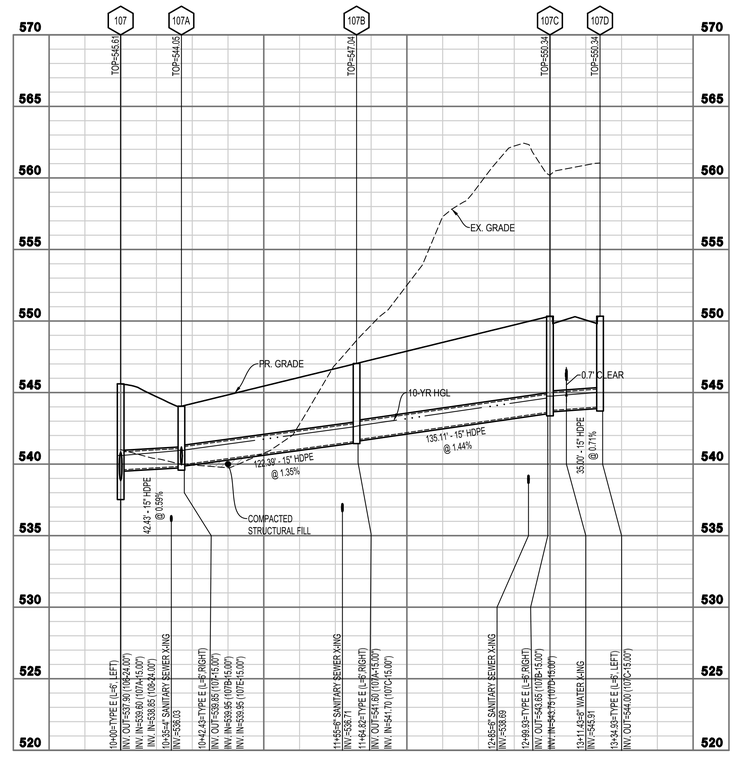

STRM 107-107D PROFILE
(SEE GRADING PLAN SHEETS 52 & 55 FOR PLAN VIEW)

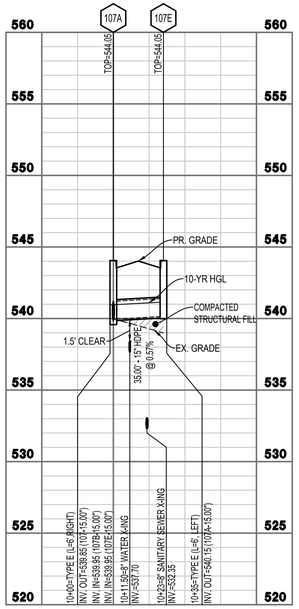

STRM 107A-107E PROFILE
(SEE GRADING PLAN SHEET 52 FOR PLAN VIEW)

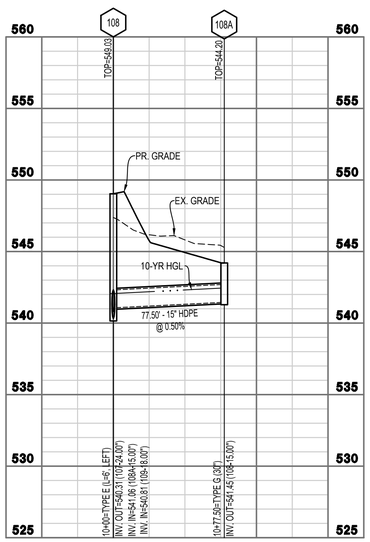

STRM 108-108A PROFILE
(SEE GRADING PLAN SHEET 52 FOR PLAN VIEW)

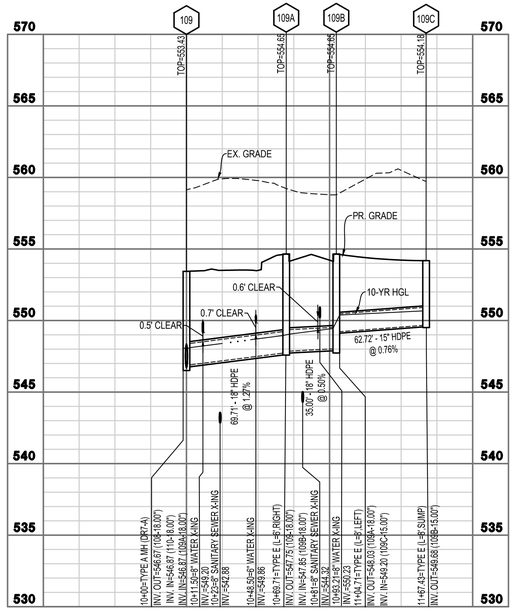

STRM 109-109C PROFILE
(SEE GRADING PLAN SHEET 52 FOR PLAN VIEW)

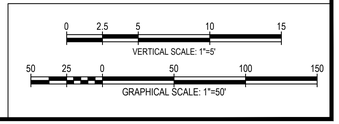

INTEGRITY
FEDERAL SERVICES
CIVIL ENGINEERING • LANDSCAPE ARCHITECTURE • PLANNING
148 S. Queen Street, Suite 201 • Phone: 304-725-8456
Martinsburg, WV 25401 • www.ifs-se.com

JASON P. GERHART
REGISTERED
No. 19127
STATE OF
WEST VIRGINIA
PROFESSIONAL ENGINEER
SEAL:

REVISIONS
1. 10/23/2024 - JEFFERSON COUNTY, WVDOH, CTUB, AND WVAW COMMENTS
2. 12/13/2024 - JEFFERSON COUNTY AND CTUB PUMP STATION COMMENTS

STORM SEWER PROFILES

BIRDHILL MEADOWS
SUBDIVISION PHASE 1
TAX MAP 3, PARCEL 29; D.B. 1291, PG. 381
MIDDLEWAY TAX DISTRICT
JEFFERSON COUNTY, WEST VIRGINIA

J.C. FILE #24-12-SD

SCALE:	HORIZ.: 1"=50' VERT.: 1"=5'
DATE:	JULY 2024
JOB:	3568-0301
DRAWN: JMM	CHECK: JPG
CADD: C-CU-261.DWG	
NCS:	
SHEET:	127 OF 147

FILE PATH: S:\PROJECTS\3568.000 BIRDHILL MEADOWS\CIVIL\DWG\ARCHIVED\C-CU-261.DWG
COPYRIGHT © 2024 INTEGRITY FEDERAL SERVICES, INC. ALL RIGHTS RESERVED. THIS DOCUMENT IS THE PROPERTY OF INTEGRITY FEDERAL SERVICES, INC. AND IS PROTECTED BY COPYRIGHT LAWS. NO REPRODUCTION OR USE OF THIS DOCUMENT IN ANY FORM OR BY ANY MEANS, GRAPHIC, ELECTRONIC OR MECHANICAL, INCLUDING PHOTOCOPYING, RECORDING, TAPING OR INFORMATION STORAGE AND RETRIEVAL SYSTEMS IS EXPRESSLY PROHIBITED WITHOUT THE WRITTEN PERMISSION OF INTEGRITY FEDERAL SERVICES, INC.

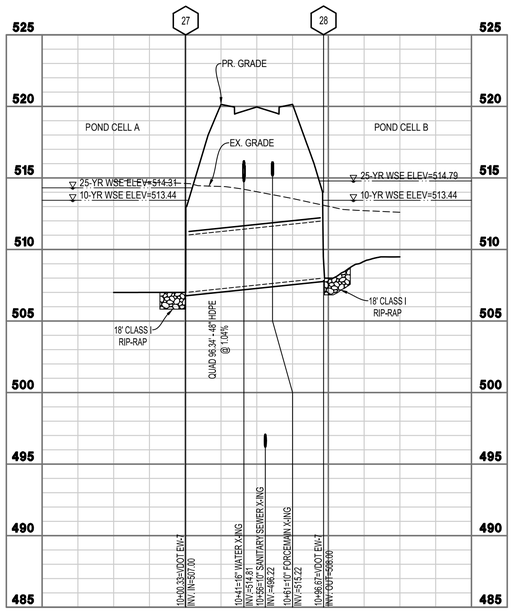

STRM CULVERT 27-28 PROFILE
(SEE GRADING PLAN SHEET 46 FOR PLAN VIEW)

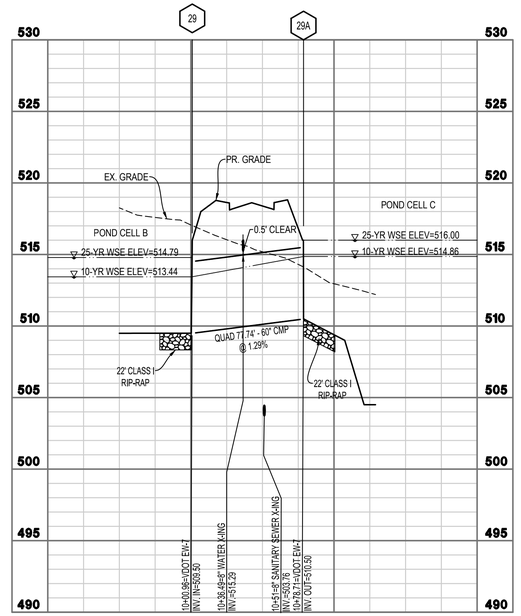

STRM CULVERT 29-29A PROFILE
(SEE GRADING PLAN SHEET 46 FOR PLAN VIEW)

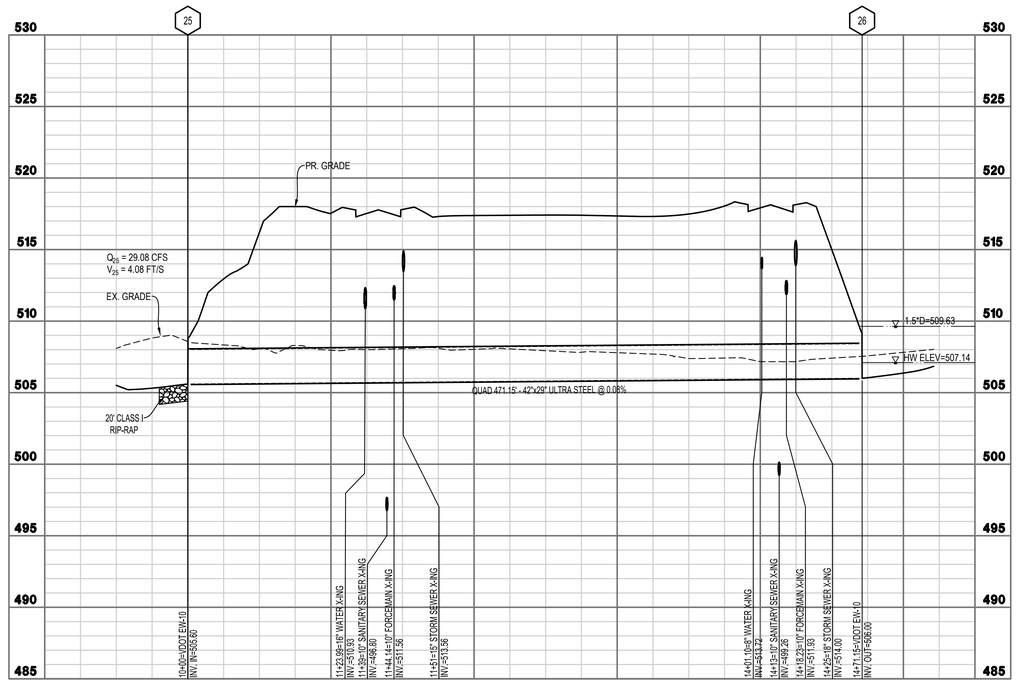

STRM CULVERT 25-26 PROFILE
(SEE GRADING PLAN SHEETS 45 & 46 FOR PLAN VIEW)

0 2.5 5 10 15
VERTICAL SCALE: 1"=5'

50 25 0 50 100 150
GRAPHICAL SCALE: 1"=50'

INTEGRITY FEDERAL SERVICES
CIVIL ENGINEERING • LANDSCAPE ARCHITECTURE • PLANNING
148 S. Queen Street, Suite 201 • Phone: 304-725-8456
Martinsburg, WV 25401 • www.ifs-ae.com

JASON P. GERHART
REGISTERED
No. 19127
STATE OF
WEST VIRGINIA
PROFESSIONAL ENGINEER
12-13-24

SEAL:

REVISIONS

1. 10/23/2024 - JEFFERSON COUNTY, WVDOH, CTUB, AND WVAW COMMENTS
2. 12/13/2024 - JEFFERSON COUNTY AND CTUB PUMP STATION COMMENTS

STORM SEWER PROFILES

BIRDHILL MEADOWS SUBDIVISION PHASE 1

TAX MAP 3, PARCEL 29; D.B. 1291, PG. 381
MIDDLEWAY TAX DISTRICT
JEFFERSON COUNTY, WEST VIRGINIA

J.C. FILE #24-12-SD

SCALE:	HORIZ.: 1"=50' VERT.: 1"=5'
DATE:	JULY 2024
JOB:	3568-0301
DRAWN: JMM	CHECK: JPG
CADD: C-CU-261.DWG	
NCS:	
SHEET:	128 OF 147

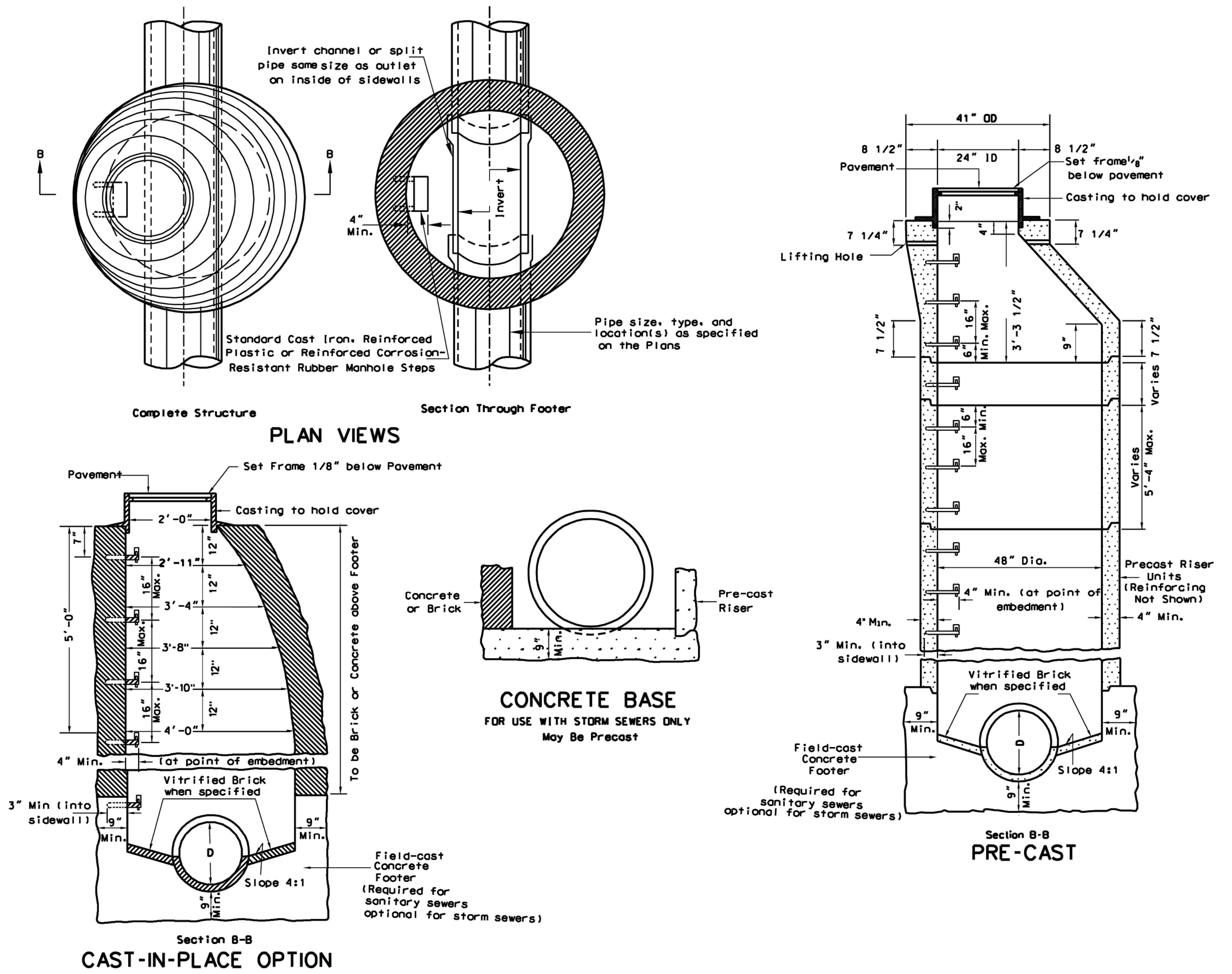

NOTES

Type A Manholes, when specified on the Plans, may be constructed in either method (cast-in-place or pre-cast option) as shown herein.

Steps, frames, and covers shall be as shown on Standard Sheet DR7-X.
"Keyed" or "doweled" type construction joints, acceptable to the Engineer, may be used in the construction of concrete manholes.

If the cast-in-place manhole is over twelve feet (12') in depth, the sidewalls below that depth will be double thickness.

Pipe at elevations other than shown may be joined to the manhole by cutting a hole the size of the connecting pipe in the manhole, inserting the pipe the thickness of the manhole shell and closing all openings around the connecting pipe with joint mortar.

Drawing shows pipe entering and leaving manhole in a straight line. However, the pipes may enter or leave at an angle or place as called for or shown on the Plans.

Minimum height of bench wall above flowline of pipe is 25% of the diameter of the pipes.

The use of brick for manhole construction will not be allowed when a manhole is located in the roadway.

The following additional notes are applicable for pre-cast manholes:
Manhole steps shall be placed into plastic concrete wall during manufacture or mortared into holes after the concrete has set.

Sidewall sections may be used in any combination to produce a manhole of desired depth, except the tapered top section shall be retained as shown.

The tapered top section shall be manufactured and meet the same requirements as the manhole's sidewalls, but shall conform to the dimensions detailed herein.

Lifting holes in the tapered top section and the circumferential notches in the manhole cover are for handling purposes only.

The pre-cast sidewall units shall be set in joint mortar or sealed with O-ring gaskets.

WEST VIRGINIA DEPARTMENT OF TRANSPORTATION
DIVISION OF HIGHWAYS
STANDARD DETAIL

PREPARED 7-1-99
REVISION DATE

TYPE A MANHOLE

STANDARD SHEET DR7-A

DIMENSIONS OF GALVANIZED STEEL END SECTION FOR ROUND PIPE

PIPE DIAM. (INCHES)	METAL THK. (INCHES)	A ± 1"	B MAX	H ± 1"	L ± 1 1/2"	W ± 2"	APPROX. SLOPE	BODY
12	.064	6	6	6	21	24	2 1/2	1 PC.
15	.064	7	8	6	26	30	2 1/2	1 PC.
18	.064	8	10	6	31	36	2 1/2	1 PC.
21	.064	9	12	6	36	42	2 1/2	1 PC.
24	.064	10	13	6	41	48	2 1/2	1 PC.
30	.079	12	16	8	51	60	2 1/2	1 PC.
36	.079	14	19	9	60	72	2 1/2	2 PC.
42	.109	16	22	11	69	84	2 1/2	2 PC.
48	.109	18	27	12	78	90	2 1/4	2 PC.
54	.109	18	30	12	84	102	2	2 PC.
60	.109	18	33	12	87	114	1 3/4	3 PC.
66	.109	18	36	12	87	120	1 1/2	3 PC.
72	.109	18	39	12	87	126	1 1/3	3 PC.
78	.109	18	42	12	87	132	1 1/4	3 PC.
84	.109	18	45	12	87	138	1 1/6	3 PC.

DIMENSIONS OF GALVANIZED STEEL END SECTION FOR PIPE ARCH

PIPE ARCH SPAN X RISE (INCHES)	EQUIV. DIAM. (INCHES)	METAL THK. (INCHES)	A ± 1"	B MAX	H ± 1"	L ± 1 1/2"	W ± 2"	APPROX. SLOPE	BODY
17X13	15	.064	7	9	6	19	30	2 1/2	1 PC.
21X15	18	.064	7	10	6	23	36	2 1/2	1 PC.
24X18	21	.064	8	12	6	28	42	2 1/2	1 PC.
28X20	24	.064	9	14	6	32	48	2 1/2	1 PC.
35X24	30	.079	10	16	6	39	60	2 1/2	1 PC.
42X29 (40X31)	36	.079	12	18	8	46	75	2 1/2	1 PC.
49X33 (46X36)	42	.109	13	21	9	53	85	2 1/2	2 PC.
57X38 (53X41)	48	.109	18	26	12	63	90	2 1/2	2 PC.
64X43 (60X46)	54	.109	18	30	12	70	102	2 1/4	2 PC.
71X47 (66X51)	60	.109	18	33	12	77	114	2 1/4	3 PC.
77X52 (73X55)	66	.109	18	36	12	77	126	2	3 PC.
83X57 (81X59)	72	.109	18	39	12	77	138	2	3 PC.

NOTE: SPAN AND RISE DIMENSIONS IN PARENTHESES ARE FOR 3"X1" CORRUGATED PIPE ARCHES; ALL OTHER SPAN AND RISE VALUES ARE FOR 2 1/2"X1/2" CORRUGATED PIPE ARCHES.

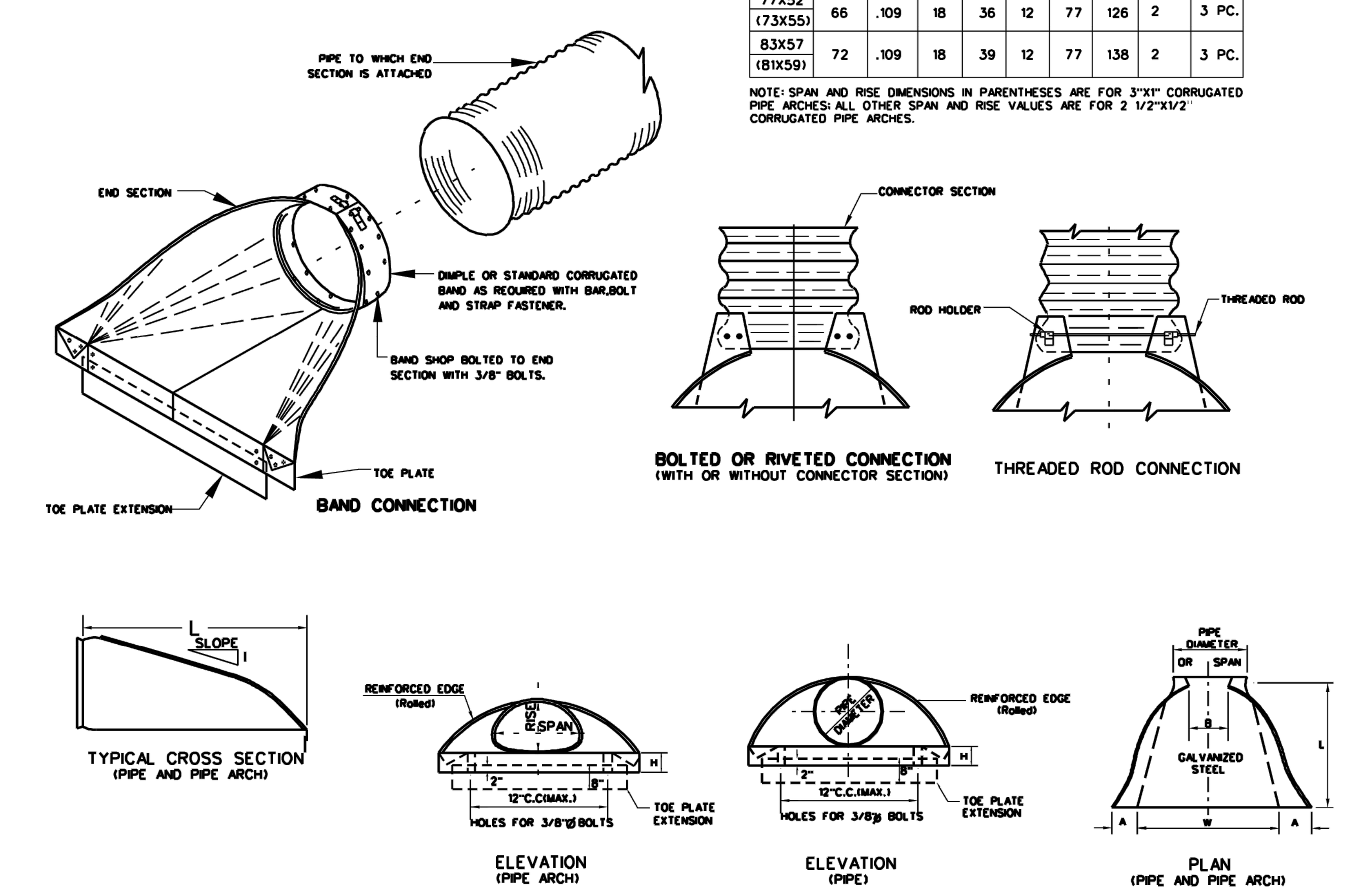

NOTES

TYPICAL END SECTIONS FOR PIPES AND PIPE ARCHES ARE DETAILED HEREIN. OTHER SIMILAR DESIGNS MAY BE USED IF ACCEPTABLE TO THE ENGINEER.

GALVANIZED STEEL END SECTIONS SHALL BE USED ON THE ENDS OF CORRUGATED STEEL PIPES AND/OR PIPE ARCHES AT THOSE LOCATIONS SPECIFIED ON THE PLANS. END SECTIONS SHALL BE MEASURED AS THE NUMBER OF UNITS INSTALLED OF EACH SIZE AND TYPE AND SHALL BE PAID FOR IN ACCORDANCE WITH 604 OF THE SPECIFICATIONS.

TWO-PIECE AND THREE-PIECE END SECTIONS SHALL BE OF LAP SEAM CONSTRUCTION, TIGHTLY JOINED WITH 3/8" DIAMETER GALVANIZED RIVETS OR BOLTS.

FOR 60" THRU 84" PIPES, THE REINFORCED EDGES OF THE END SECTIONS SHALL BE SUPPLEMENTED WITH GALVANIZED STIFFENER ANGLES FASTENED BY 3 /8 " DIAMETER GALVANIZED BOLTS AND NUTS. THIS REQUIREMENT SHALL ALSO BE APPLICABLE TO THE END SECTIONS FOR 77"X52", 73"X 55", 83"X 57", AND 81"X 59" PIPE ARCH SIZES. IN ADDITION, FOR THOSE PIPE ARCH SIZES, ANGLE REINFORCEMENT SHALL BE USED UNDER THE CENTER PANEL SEAMS.

THE END SECTION CONNECTION DETAILS SHALL BE AS SHOWN ON THIS PLAN SHEET OR OF A SIMILAR DESIGN AS RECOMMENED BY THE MANUFACTURER. ALL SIMILAR DESIGNS SHALL PROVIDE A SECURE ATTACHMENT OF THE END SECTION TO THE PIPE OR PIPE ARCH.

ALTHOUGH A PIPE OR PIPE ARCH MAY HAVE A BITUMINOUS COATING AND/OR PAVED INVERT, IT WILL NOT BE NECESSARY TO BITUMINOUS COAT OR PAVE THE END SECTION, CONNECTORS, OR CONNECTOR SECTION.

TOE PLATE EXTENSIONS SHALL BE THE SAME THICKNESS AS THE END SECTIONS AND SHALL BE FASTENED TO TOE PLATES WITH 3/8" DIAMETER GALVANIZED BOLTS. LENGTH OF TOE PLATE EXTENSION SHALL BE W+10"(approx.) FOR 12" THRU 30" DIAMETER PIPES AND FOR PIPE ARCHES WITH RISE VALUES UP TO AND INCLUDING 29". THE LENGTH SHALL BE W+22"(approx.) FOR LARGER PIPE SIZES AND W+18" (approx.) FOR LARGER PIPE ARCHES.

WEST VIRGINIA DEPARTMENT OF TRANSPORTATION
DIVISION OF HIGHWAYS
STANDARD DETAIL

PREPARED 7-1-99
REVISION DATE

END SECTIONS FOR CORRUGATED STEEL PIPES AND PIPE ARCHES

STANDARD SHEET DR3

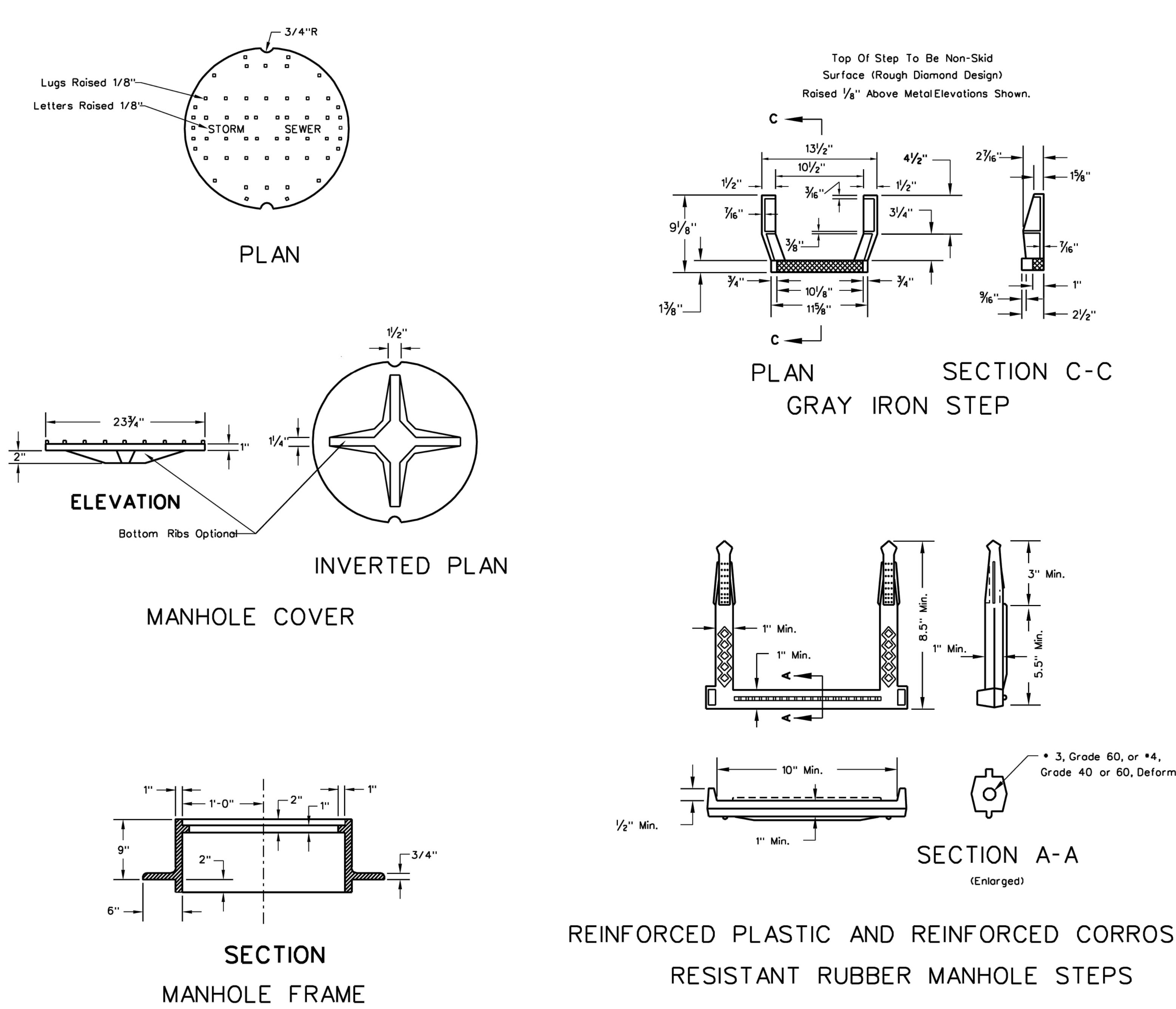

NOTES

Lettering on covers shall denote STORM SEWER or SANITARY SEWER as applicable.
Bottom ribs may be deleted from manhole cover castings.
The 1/8" raised lugs are a skid resistant measure. Alternative measures will require approval by the Engineer.
Shop Drawings shall be submitted if details and dimensions vary.

WEST VIRGINIA DEPARTMENT OF TRANSPORTATION
DIVISION OF HIGHWAYS
STANDARD DETAIL

PREPARED 7-1-99
REVISION DATE

MANHOLE CASTINGS

STANDARD SHEET DR7-X

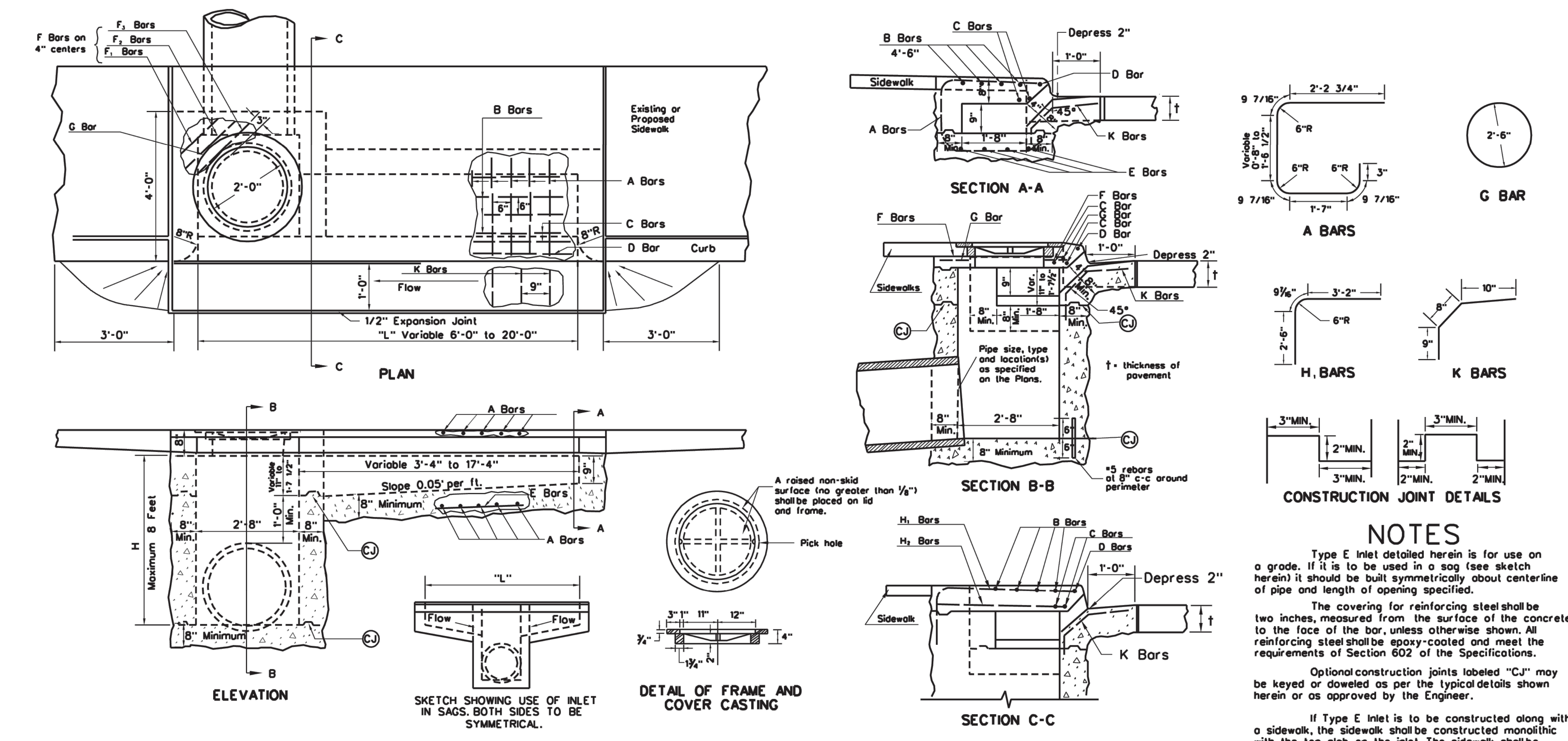

NOTES

Type E Inlet detailed herein is for use on a grade. If it is to be used in a sag (see sketch herein) it should be built symmetrically about centerline of pipe and length of opening specified.

The covering for reinforcing steel shall be two inches, measured from the surface of the concrete to the face of the bar, unless otherwise shown. All reinforcing steel shall be epoxy-coated and meet the requirements of Section 602 of the Specifications.

Optional construction joints labeled "CJ" may be keyed or doweled as per the typical details shown herein or as approved by the Engineer.

If Type E Inlet is to be constructed along with a sidewalk, the sidewalk shall be constructed monolithic with the top slab on the inlet. The sidewalk shall be reinforced with Type B Fabric placed 2" from bottom of sidewalk and extended into the top slab of the inlet a minimum distance of 8". Cost of Type B Fabric shall be included in the unit price bid for Concrete Sidewalk.

This inlet shall not be placed in a pedestrian cross walk.

CONCRETE AND REINFORCING STEEL QUANTITIES

"L" Feet	Concrete C.Y.*	Reinforcing Steel lbs.	A Bars (Bent) No.	Size	Length	B Bars (Straight) No.	Size	Length	C Bars (Straight) No.	Size	Length	D Bars (Straight) No.	Size	Length	E Bars (Straight) No.	Size	Length
6	2.59	189	5	#5	7'-1" to 7'-3"	4	#5	3'-9"	2	#5	7'-1"	1	#5	7'-1"	4	#5	3'-6"
8	3.07	250	9	#5	7'-1" to 7'-4"	4	#5	5'-9"	2	#5	9'-1"	1	#5	9'-1"	4	#5	5'-6"
10	3.57	308	13	#5	7'-1" to 7'-5"	4	#5	7'-9"	2	#5	11'-1"	1	#5	11'-1"	4	#5	7'-6"
12	4.09	369	17	#5	7'-1" to 7'-6"	4	#5	9'-9"	2	#5	13'-1"	1	#5	13'-1"	4	#5	9'-6"
14	4.62	444	21	#5	7'-1" to 7'-7"	4	#5	11'-9"	2	#6	15'-1"	1	#5	15'-1"	4	#5	11'-6"
16	5.17	506	25	#5	7'-1" to 7'-9"	4	#5	13'-9"	2	#6	17'-1"	1	#5	17'-1"	4	#5	13'-6"
18	5.74	570	29	#5	7'-1" to 7'-10"	4	#5	15'-9"	2	#6	19'-1"	1	#5	19'-1"	4	#5	15'-6"
20	6.19	636	33	#5	7'-1" to 8'-0"	4	#5	17'-9"	2	#6	21'-1"	1	#5	21'-1"	4	#5	17'-6"

"L" Feet	F1 Bars (Straight) No.	Size	Length	F2 Bars (Straight) No.	Size	Length	F3 Bars (Straight) No.	Size	Length	G Bar (Bent) No.	Size	Length	H1 Bars (Straight) No.	Size	Length	H2 Bars (Straight) No.	Size	Length	K Bars (Bent) No.	Size	Length
6	4	#5	2'-0"	4	#5	2'-6"	4	#5	3'-0"	1	#5	8'-0"	2	#7	6'-5"	2	#6	3'-4"	10	#5	2'-3"
8	4	#5	2'-0"	4	#5	2'-6"	4	#5	3'-0"	1	#5	8'-0"	2	#7	6'-5"	2	#6	3'-4"	13	#5	2'-3"
10	4	#5	2'-0"	4	#5	2'-6"	4	#5	3'-0"	1	#5	8'-0"	2	#7	6'-5"	2	#6	3'-4"	15	#5	2'-3"
12	4	#5	2'-0"	4	#5	2'-6"	4	#5	3'-0"	1	#5	8'-0"	2	#7	6'-5"	2	#6	3'-4"	18	#5	2'-3"
14	4	#5	2'-0"	4	#5	2'-6"	4	#5	3'-0"	1	#5	8'-0"	2	#7	6'-5"	2	#6	3'-4"	21	#5	2'-3"
16	4	#5	2'-0"	4	#5	2'-6"	4	#5	3'-0"	1	#5	8'-0"	2	#7	6'-5"	2	#6	3'-4"	23	#5	2'-3"
18	4	#5	2'-0"	4	#5	2'-6"	4	#5	3'-0"	1	#5	8'-0"	2	#7	6'-5"	2	#6	3'-4"	26	#5	2'-3"
20	4	#5	2'-0"	4	#5	2'-6"	4	#5	3'-0"	1	#5	8'-0"	2	#7	6'-5"	2	#6	3'-4"	29	#5	2'-3"

* The quantities shown above are for an H of five feet. If deeper inlets are required the quantities must be adjusted accordingly.

The above table to be used for estimating purposes only.

WEST VIRGINIA DEPARTMENT OF TRANSPORTATION
DIVISION OF HIGHWAYS
STANDARD DETAIL

PREPARED 7-1-99
REVISION DATE

TYPE E INLET

STANDARD SHEET DR6-E

INTEGRITY FEDERAL SERVICES
CIVIL ENGINEERING • LANDSCAPE ARCHITECTURE • PLANNING
148 S. Queen Street, Suite 201 • Phone: 304-725-8456
Martinsburg, WV 25401 • www.ifs-ae.com

JASON P. GERHART
REGISTERED
No. 19127
STATE OF
WEST VIRGINIA
PROFESSIONAL ENGINEER
12-13-24
SEAL:

REVISIONS
1. 10/23/2024 - JEFFERSON COUNTY, WVDOH, CTUB, AND WVAW COMMENTS
2. 12/13/2024 - JEFFERSON COUNTY AND CTUB PUMP STATION COMMENTS

STORM SEWER DETAILS

BIRDHILL MEADOWS SUBDIVISION PHASE 1

TAX MAP 3, PARCEL 29; D.B. 1291, PG. 381
MIDDLEWAY TAX DISTRICT
JEFFERSON COUNTY, WEST VIRGINIA

J.C. FILE #24-12-SD

SCALE:	HORIZ.: AS NOTED VERT.: N/A
DATE: JULY 2024	
JOB: 3568-0301	
DRAWN: JMM	CHECK: JPG
CADD: C-CU-561.DWG	
NCS:	
SHEET: 129 OF 147	

FILE PATH: G:\PROJECT\GENERAL\3568-0301 MILLER PROPERTY PHASE 1\ENGIN\PLANS\C-CU-561.DWG
COPYRIGHT . NO REPRODUCTION OR USE OF THIS DRAWING IS ALLOWED IN PART OR IN WHOLE BY ANY PROCESS WITHOUT PRIOR WRITTEN AUTHORIZATION FROM INTEGRITY FEDERAL SERVICES (INTEGRITY).

INLET MOUNDING TABLE

DITCH GRADE (%) FROM	TO	L1, HORIZONTAL LENGTH (FT.)	L2, HORIZONTAL LENGTH (FT.)
0	3	10	15
3	5	9	20
5	7.5	8	40
7.5	UP	SPECIAL DESIGN	SPECIAL DESIGN

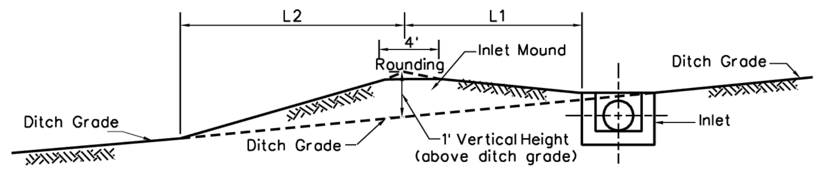

MOUNDING DETAIL
Median and Side Ditches

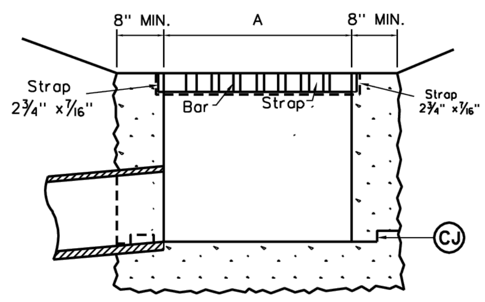

SECTION A-A
(Type 2 Grate Shown)

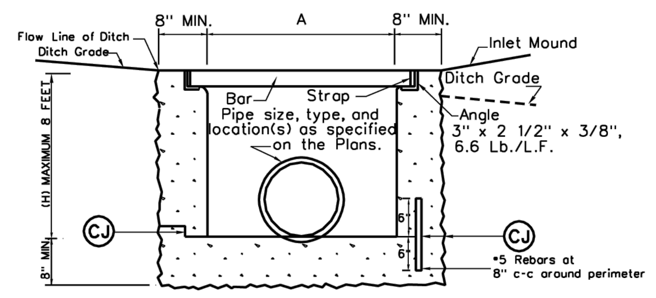

SECTION B-B

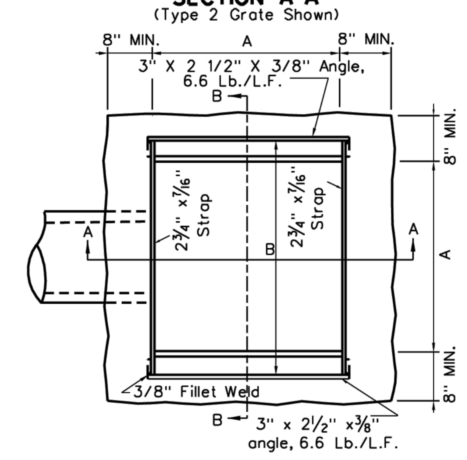

PLAN

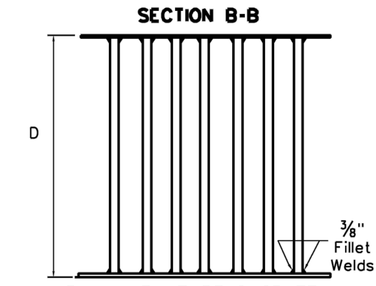

PLAN VIEW-TYPE 2 GRATE

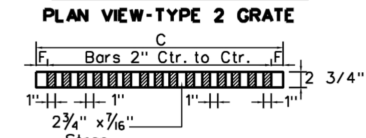

SECTION THROUGH TYPE 1 GRATE

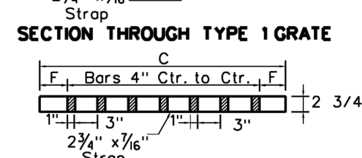

SECTION THROUGH TYPE 2 GRATE

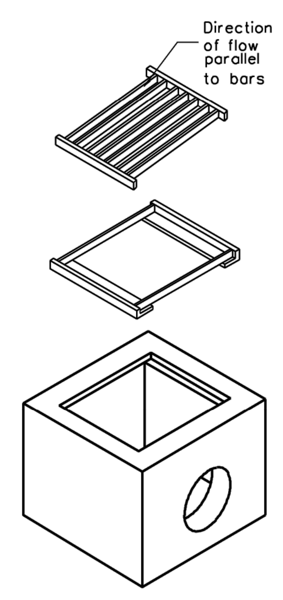

EXPLODED DETAIL

Pipe Size	DIMENSIONS A	B	C	D	H(Min)	TYPE 2 GRATE F	Bars	WT.	FRAME WT.	TYPE 1 GRATE F	Bars	WT.
18"	2'-8"	3'-2"	2'-7 3/4"	3'-1 3/4"	2'-0"	3 3/8"	7	223	62	1 3/8"	15	453
21"	2'-8"	3'-2"	2'-7 3/4"	3'-1 3/4"	2'-3"	3 3/8"	7	223	62	1 3/8"	15	453
24"	2'-8"	3'-2"	2'-7 3/4"	3'-1 3/4"	2'-6"	3 3/8"	7	223	62	1 3/8"	15	453
27"	3'-0"	3'-6"	2'-11 3/4"	3'-5 3/4"	2'-9"	3 3/8"	8	279	69	1 3/8"	17	566
30"	3'-6"	4'-0"	3'-5 3/4"	3'-11 3/4"	3'-0"	3 3/8"	9	357	80	1 3/8"	21	797
33"	3'-9"	4'-3"	3'-8 3/4"	4'-2 3/4"	3'-3"	3 7/8"	10	419	85	1 7/8"	21	847
36"	4'-0"	4'-6"	3'-11 3/4"	4'-5 3/4"	3'-6"	3 3/8"	11	486	90	1 3/8"	23	981
42"	4'-6"	5'-0"	4'-5 3/4"	4'-11 3/4"	4'-0"	3 3/8"	12	587	101	1 3/8"	27	1277
48"	5'-0"	5'-6"	4'-11 3/4"	5'-5 3/4"	4'-6"	3 3/8"	14	748	112	1 3/8"	29	1507

Table Note: Grate and frame weights are for information only and will increase if larger straps and bars are used.

The following substitutions in dimensions are acceptable for fabricating the grate and frame:

Strap Thickness: 1/2"   Strap Depth: 3"   Bar Depth: 3"

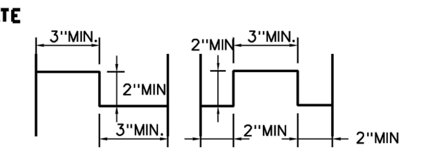

CONSTRUCTION JOINT DETAILS

NOTES

The final installed top surface of inlet and grate shall be flush with adjacent finished surfaces such as pavement, gutters, curbs, and sidewalks. Top of grate elevation, if shown on the plans, is for information only.

Construction may be cast-in place, precast in one or multiple sections, or any combination of cast-in-place and precast.

Type 2 Grate shall be used at all locations unless otherwise specified on the Plans. Type 1 Urban Grates shall be used only at specially designated locations as shown on the plans.

The Contractor, at his option, may omit use of the frame by forming a ledge in the concrete.

Special care shall be execised in forming the 2" wide concrete ledge to provide a smooth, even surface for supporting the grates if the shallow frame is not used. no projections shall exist on the bearing surfaces of the ledge or the grates, and the grates shall seat on the ledge without rocking.

The Mounding Detail as shown is not required when an inlet is placed in a sag.

Optional construction joints labeled "CJ" may be roughened concrete, keyed or doweled as per the typical details shown herein or as approved by the Engineer. Non shrink grout meeting the requirements of subsection 715.5 of the specifications may be used to a depth of ½" for leveling between precast sections. Thicker depths will be allowed as per the manufacturer's recommendations.

This inlet is to be installed in roadside or median ditches only. It is not to be placed adjacent to pavement or in the gutter pan of combination curb and gutter.

The minimum distance from the top of any pipe opening to any construction joint above the opening shall be four (4) inches.

The number and location of pipe openings shall be as shown in the plans. The contractor at no additional cost, shall be responsible for any temporary bracing required to transport precast inlet sections due to multiple openings.

WEST VIRGINIA DEPARTMENT OF TRANSPORTATION
DIVISION OF HIGHWAYS
STANDARD DETAIL

PREPARED 7-1-99
REVISION DATE

TYPE G INLET

STANDARD SHEET DR6-G

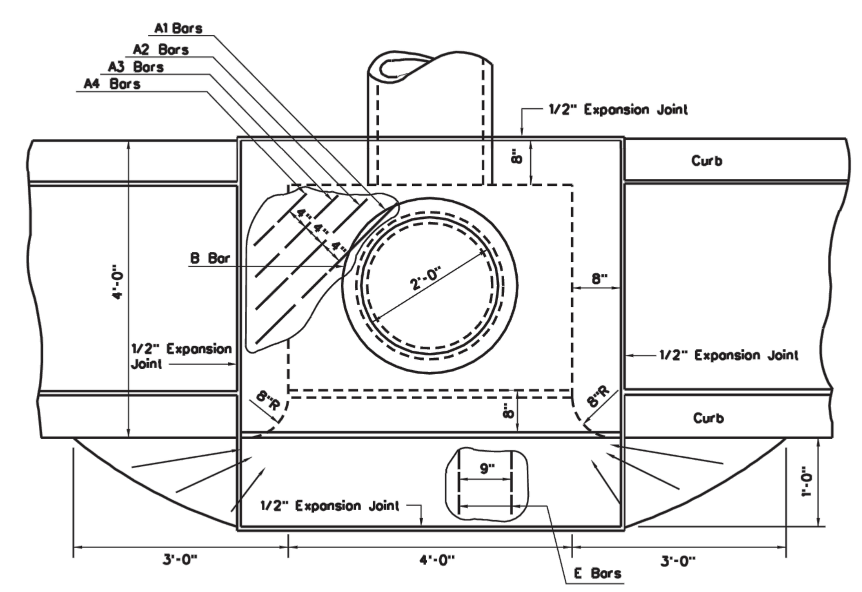

PLAN

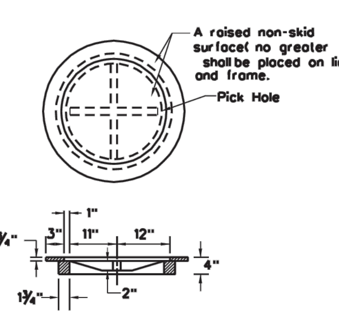

DETAIL OF FRAME AND COVER CASTING (RING TYPE)

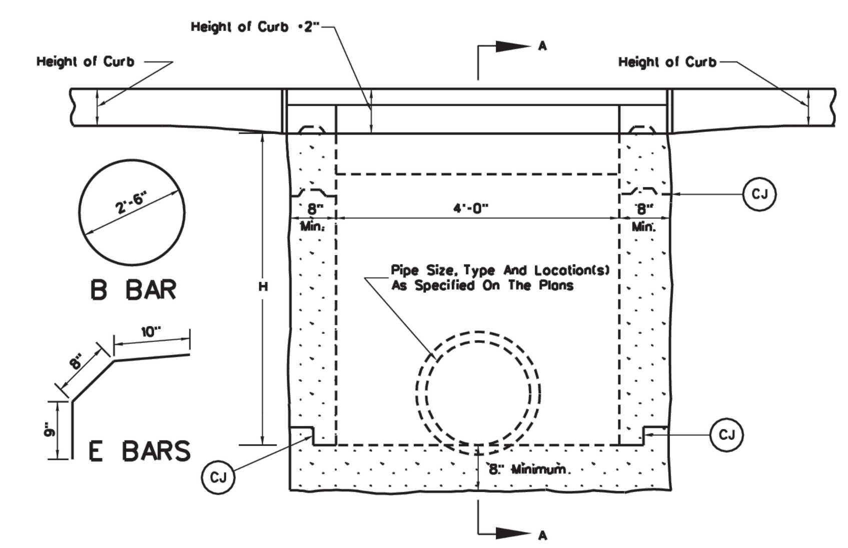

ELEVATION

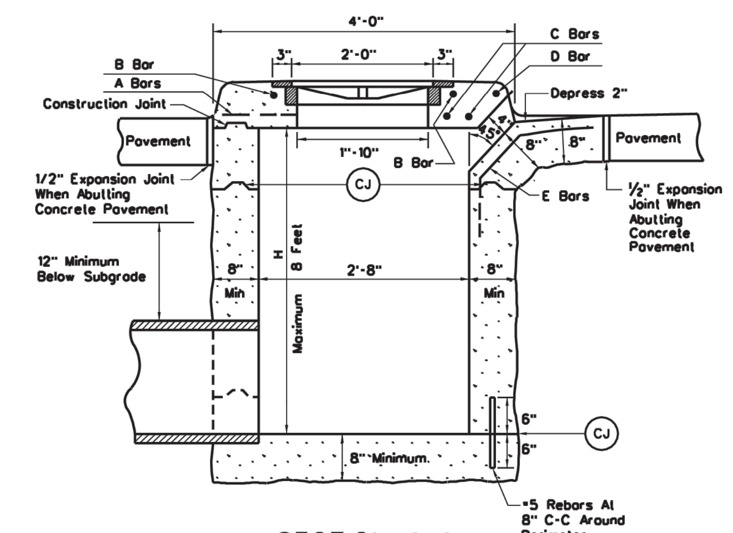

SECTION A-A

NOTES

Optional construction joints labeled "CJ" may be roughened concrete, keyed or doweled as per the typical details shown herein or as approved by the Engineer. Non shrink grout meeting the requirements of subsection 715.5 of the specifications may be used to a depth of ½" for leveling between precast sections. Thicker depths will be allowed if as per the manufacturer's recommendations.

The covering for reinforcing steel shall be two inches, measured from the surface of the concrete to the face of the bar, unless otherwise shown. All reinforcing steel shall be epoxy coated and meet the requirements of section 602 of the specifications.

This inlet shall not be placed in a pedestrian cross walk.

Construction may be cast-in-place, precast in one or multiple sections, or any combination of cast-in-place and precast.

The minimum distance from the top of any pipe opening to any construction joint above the opening shall be four (4) inches.

The number and location of pipe openings shall be as shown in the plans. The contractor at no additional cost, shall be responsible for any temporary bracing required to transport precast inlet sections due to multiple openings.

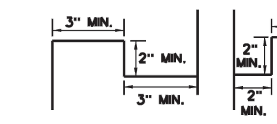

CONSTRUCTION JOINT DETAILS

BILL OF STEEL

Mark	Size Bar	No.	Length	Weight
A1	#5	2	3'-11"	8 lbs.
A2	#5	2	3'-3"	7
A3	#5	2	2'-7"	5
A4	#5	2	1'-11"	6
B	#5	1	8'-0"	8
C	#8	2	5'-0"	27
D	#5	1	5'-0"	5
E	#5	6	2'-3"	14
			Total	80 lbs.

WEST VIRGINIA DEPARTMENT OF TRANSPORTATION
DIVISION OF HIGHWAYS
STANDARD DETAIL

PREPARED 7-1-99
REVISION DATE

TYPE D INLET

STANDARD SHEET DR6-D

INTEGRITY FEDERAL SERVICES
CIVIL ENGINEERING • LANDSCAPE ARCHITECTURE • PLANNING
148 S. Queen Street, Suite 201 • Phone: 304-725-8456
Martinsburg, WV 25401 • www.ifs-ae.com

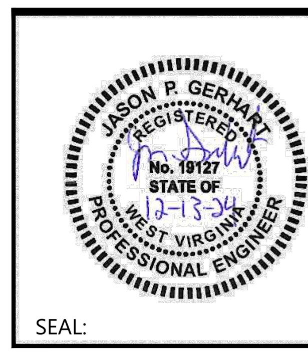

SEAL:

REVISIONS
1. 10/23/2024 - JEFFERSON COUNTY, WVDOH, CTUB, AND WVAW COMMENTS
2. 12/13/2024 - JEFFERSON COUNTY AND CTUB PUMP STATION COMMENTS

STORM SEWER DETAILS

BIRDHILL MEADOWS SUBDIVISION PHASE 1

TAX MAP 3, PARCEL 29; D.B. 1291, PG. 381
MIDDLEWAY TAX DISTRICT
JEFFERSON COUNTY, WEST VIRGINIA

J.C. FILE #24-12-SD

SCALE:	HORIZ.: AS NOTED VERT.: N/A
DATE:	JULY 2024
JOB:	3568-0301
DRAWN: JMM	CHECK: JPG
CADD:	C-CU-561.DWG
NCS:	
SHEET:	130 OF 147

FILE PATH: G:\PROJECT\GENERAL\3568-0301 MILLER PROPERTY PHASE 1\ENGIN\PLANS\C-CU-561.DWG
COPYRIGHT . NO REPRODUCTION OR USE OF THIS DRAWING IS ALLOWED IN PART OR IN WHOLE BY ANY PROCESS WITHOUT PRIOR WRITTEN AUTHORIZATION FROM INTEGRITY FEDERAL SERVICES (INTEGRITY).

STORM SEWER PIPE COMPUTATIONS

Reference Note	Structure Up	Structure Down	LineID	DrainageArea (ac)	RunoffCoeff (C)	IncrCxA	TotalCxA	InletTime (min)	iSys (in/hr)	Incr Flow Rate (cfs)	KnownQ (cfs)	Total FlowRate (cfs)	InvertUp (ft)	InvertDn (ft)	LineLength (ft)	LineSlope (%)	LineSize (in)	Manning's Roughness Coefficient n	CapacityFull (cfs)	Vel Partial (ft/s)	PipeTravel (min)	Tc Total (min)	Grnd/Rim Elev Up (ft)
18	1	2	2A	3	4	5	6	7	8	9A	9B	9	10	11	12	13	14	14A	15	16	17	17A	A
	7	6	7-6	0.03	0.63	0.02	0.02	5.00	6.49	0.12	0.00	0.12	534.00	525.60	179.50	4.68	15	0.012	15.14	0.0	0.00	5.00	536.25
	6A	6	6A-6	0.26	0.74	0.19	0.19	5.00	6.49	1.25	0.00	1.25	525.83	525.60	46.72	0.49	15	0.012	4.91	3.2	0.24	5.00	529.68
	6	5	6-5	0.29	0.72	0.21	0.42	5.00	6.40	2.69	0.00	2.69	525.53	518.35	172.22	4.17	15	0.012	14.29	8.5	0.34	5.24	529.46
	5A	5	5A-5	0.25	0.65	0.16	0.16	5.00	6.49	1.05	0.00	1.05	518.73	518.55	35.00	0.51	15	0.012	5.02	3.1	0.19	5.00	522.56
	5	4	5-4	0.26	0.70	0.18	0.76	5.00	6.28	4.80	0.00	4.80	518.25	515.53	194.46	1.40	15	0.012	8.28	7.0	0.46	5.58	522.56
	4B	4A	4B-4A	0.09	0.74	0.07	0.07	5.00	6.49	0.43	0.00	0.43	516.10	515.84	44.05	0.59	15	0.012	5.38	2.4	0.30	5.00	519.31
	4A	4	4A-4	0.20	0.62	0.12	0.19	5.00	6.37	1.21	0.00	1.21	515.74	515.53	41.44	0.51	15	0.012	4.98	3.2	0.21	5.30	520.28
	4	3	4-3	0.30	0.70	0.21	1.17	5.00	6.12	7.14	0.00	7.14	515.28	513.57	256.65	0.67	18	0.012	9.29	5.8	0.74	6.04	520.06
	3A	3	3A-3	0.15	0.78	0.12	0.12	5.00	6.49	0.76	0.00	0.76	514.00	513.82	35.75	0.50	15	0.012	4.97	2.8	0.22	5.00	517.39
	3	2	3-2	0.29	0.76	0.22	1.50	5.00	5.90	8.86	0.00	8.86	513.47	513.29	35.00	0.51	30x19	0.013	15.59	5.2	0.11	6.78	517.51
	2A	2	2A-2	0.16	0.78	0.12	0.12	5.00	6.49	0.81	0.00	0.81	513.81	513.62	35.75	0.53	15	0.012	5.10	2.8	0.21	5.00	517.39
Outfall	2	1	2-1	0.21	0.61	0.13	1.76	5.00	5.86	10.29	0.00	10.29	513.19	513.00	38.24	0.50	30x19	0.013	15.33	5.3	0.12	6.89	517.51
	17	16	17-16	0.21	0.69	0.14	0.14	5.00	6.49	0.94	0.00	0.94	514.75	514.50	27.99	0.89	15	0.012	6.61	3.6	0.13	5.00	518.73
	16	15	16-15	0.29	0.79	0.23	0.37	5.00	6.43	2.41	0.00	2.41	514.50	514.26	44.05	0.54	15	0.012	5.17	4.1	0.18	5.13	518.13
	15	14	15-14	0.05	0.64	0.03	0.41	5.00	6.37	2.59	0.00	2.59	514.16	513.98	35.01	0.51	15	0.012	5.02	4.1	0.14	5.31	519.09
	14	13	14-13	0.05	0.69	0.03	0.44	5.00	6.32	2.78	0.00	2.78	513.88	512.53	115.05	1.17	15	0.012	7.58	5.6	0.34	5.45	519.10
	13B	13A	13B-13A	1.53	0.41	0.63	0.63	5.00	6.49	4.07	0.00	4.07	513.70	512.82	150.37	0.59	15	0.012	5.35	4.8	0.52	5.00	515.81
	13A	13	13A-13	0.15	0.62	0.09	0.72	5.00	6.30	4.54	0.00	4.54	512.72	512.53	35.85	0.53	15	0.012	5.09	4.7	0.13	5.52	518.07
	13	12	13-12	0.10	0.67	0.07	1.23	5.00	6.21	7.62	0.00	7.62	512.28	511.33	128.95	0.74	18	0.012	9.77	6.1	0.35	5.79	518.21
	12A	12	12A-12	1.17	0.50	0.59	0.59	5.00	6.49	3.80	0.00	3.80	512.61	512.43	35.00	0.51	15	0.012	5.02	4.5	0.13	5.00	516.48
	12	11	12-11	0.38	0.65	0.25	2.06	5.00	6.09	12.55	0.00	12.55	510.83	510.63	21.81	0.92	24	0.012	23.47	7.5	0.05	6.14	516.48
	11C	11A	11C-11A	0.42	0.50	0.21	0.21	5.00	6.49	1.36	0.00	1.36	513.50	511.82	66.12	2.54	15	0.012	11.15	5.7	0.19	5.00	514.86
	11B	11A	11B-11A	0.16	0.50	0.08	0.08	5.00	6.49	0.52	0.00	0.52	512.00	511.82	22.71	0.79	15	0.012	6.23	2.8	0.14	5.00	514.37
	11A	11	11A-11	0.00	0.00	0.00	0.29	5.00	6.41	1.86	0.00	1.86	511.72	511.38	66.67	0.51	15	0.012	5.00	3.7	0.30	5.19	517.19
Outfall	11	10	11-10	0.00	0.90	0.00	2.35	5.00	6.08	14.28	0.00	14.28	510.53	509.00	109.01	1.40	24	0.012	29.03	9.1	0.20	6.19	516.60
	24	23	24-23	0.17	0.66	0.11	0.11	5.00	6.49	0.73	0.00	0.73	514.30	514.04	45.12	0.58	15	0.012	5.31	2.8	0.27	5.00	517.95
	23	22	23-22	0.10	0.66	0.07	0.18	5.00	6.39	1.14	0.00	1.14	513.94	513.76	35.00	0.51	15	0.012	5.02	3.1	0.19	5.27	517.78
	22	21	22-21	0.20	0.72	0.14	0.32	5.00	6.32	2.04	0.00	2.04	513.66	513.26	79.29	0.50	15	0.012	4.97	3.8	0.35	5.45	517.78
	21A	21	21A-21	0.19	0.69	0.13	0.13	5.00	6.49	0.85	0.00	0.85	514.40	514.20	35.00	0.57	15	0.012	5.29	3.0	0.19	5.00	518.30
Outfall	21	20	21-20	0.18	0.69	0.12	0.58	5.00	6.20	3.58	0.00	3.58	513.16	513.00	31.50	0.51	15	0.012	4.99	4.4	0.12	5.80	518.30
	35	34	35-34	0.43	0.67	0.29	0.29	5.00	6.49	1.87	0.00	1.87	529.90	529.70	35.75	0.56	15	0.012	5.23	3.8	0.16	5.00	534.16
	34	33	34-33	0.00	0.00	0.00	0.29	5.00	6.43	1.85	0.00	1.85	529.60	529.00	55.02	1.09	15	0.012	7.31	4.8	0.19	5.16	535.86
	33	32	33-32	0.08	0.80	0.06	0.35	5.00	6.36	2.24	0.00	2.24	528.90	523.75	128.93	3.99	15	0.012	13.99	8.0	0.27	5.35	533.67
	32	31	32-31	0.46	0.56	0.26	0.61	5.00	6.26	3.82	0.00	3.82	521.70	520.40	35.29	3.68	15	0.012	13.43	9.2	0.06	5.61	528.56
Outfall	31	30	31-30	0.16	0.64	0.10	0.71	5.00	6.24	4.45	0.00	4.45	518.75	515.00	49.14	7.63	15	0.012	19.33	12.1	0.07	5.68	528.38
	42	41	42-41	0.28	0.61	0.17	0.17	5.00	6.49	1.11	0.00	1.11	517.90	517.70	35.00	0.57	15	0.012	5.29	3.2	0.18	5.00	521.80
Outfall	41	40	41-40	0.13	0.78	0.10	0.27	5.00	6.42	1.75	0.00	1.75	517.60	514.00	42.17	8.54	15	0.012	20.45	9.2	0.08	5.18	521.80
	71C	71B	71C-71B	0.66	0.44	0.29	0.29	5.00	6.49	1.88	0.00	1.88	523.15	522.80	67.03	0.52	15	0.012	5.06	3.8	0.29	5.00	525.90
	71B	71A	71B-71A	0.29	0.70	0.20	0.49	5.00	6.38	3.15	0.00	3.15	522.70	522.50	37.01	0.54	15	0.012	5.14	4.4	0.14	5.29	530.59
	71A	71	71A-71	0.32	0.63	0.20	0.70	5.00	6.33	4.40	0.00	4.40	522.40	519.00	110.88	3.07	15	0.012	12.25	9.0	0.21	5.43	530.67
	82	81	82-81	12.59	0.50	6.30	6.30	13.00	4.60	28.96	0.00	28.96	530.40	530.00	40.03	1.00	30	0.012	44.42	9.7	0.07	13.00	533.11
	81	80	81-80	0.01	0.90	0.01	6.30	5.00	4.59	28.93	0.00	28.93	529.30	528.40	58.75	1.53	30	0.012	55.00	11.3	0.09	13.07	536.48
	80A	80	80A-80	0.81	0.32	0.26	0.26	5.00	6.49	1.68	0.00	1.68	527.65	527.50	28.52	0.53	15	0.012	5.08	3.6	0.13	5.00	530.10
	80	79	80-79	0.00	0.00	0.00	6.56	5.00	4.57	30.02	0.00	30.02	526.60	526.40	37.25	0.54	30	0.012	32.56	7.6	0.08	13.16	535.20
	79A	79	79A-79	3.93	0.65	2.55	2.55	12.00	4.70	12.02	0.00	12.02	530.70	530.01	87.56	0.79	24	0.012	21.76	7.1	0.20	12.00	534.20
	79	78	79-78	0.04	0.78	0.03	9.15	5.00	4.56	41.73	0.00	41.73	525.70	525.22	75.13	0.64	36	0.012	57.76	8.9	0.14	13.24	534.98
	78C	78B	78C-78B	0.14	0.73	0.10	0.10	5.00	6.49	0.66	0.00	0.66	530.00	528.30	83.31	2.04	15	0.012	10.00	4.2	0.33	5.00	535.82
	78B	78A	78B-78A	0.12	0.73	0.09	0.19	5.00	6.36	1.21	0.00	1.21	528.20	528.00	37.56	0.53	15	0.012	5.11	3.3	0.19	5.33	534.56
	78A	78	78A-78	0.40	0.66	0.26	0.45	5.00	6.30	2.86	0.00	2.86	527.90	526.97	39.13	2.38	15	0.012	10.79	7.2	0.09	5.52	534.40
	78	77	78-77	0.14	0.61	0.09	9.69	5.00	4.54	43.98	0.00	43.98	525.12	524.94	35.18	0.51	36	0.012	51.69	8.3	0.07	13.38	533.70
	77	76	77-76	0.11	0.68	0.07	9.76	5.00	4.53	44.21	0.00	44.21	524.84	523.60	161.94	0.77	36	0.012	63.23	9.7	0.28	13.45	533.66
	76	75	76-75	0.27	0.69	0.19	9.95	5.00	4.48	44.62	0.00	44.62	523.50	522.40	77.64	1.42	36	0.012	86.01	12.3	0.11	13.73	531.22
	75	74	75-74	0.86	0.40	0.34	10.29	5.00	4.47	46.00	0.00	46.00	522.30	521.20	115.23	0.95	36	0.012	70.60	10.7	0.18	13.83	528.91
	74B	74A	74B-74A	0.18	0.67	0.12	0.12	5.00	6.49	0.78	0.00	0.78	526.50	526.30	37.83	0.53	15	0.012	5.09	2.8	0.22	5.00	533.02
	74A	74	74A-74	0.10	0.79	0.08	0.20	5.00	6.40	1.28	0.00	1.28	526.20	522.95	97.55	3.33	15	0.012	12.77	6.2	0.26	5.22	532.53
	74	73	74-73	0.07	0.79	0.06	10.55	5.00	4.44	46.85	0.00	46.85	521.10	520.60	53.70	0.93	36	0.012	69.72	10.6	0.08	14.01	529.45
	73	72	73-72	0.05	0.81	0.04	10.59	5.00	4.43	46.90	0.00	46.90	520.50	519.35	128.11	0.90	36	0.012	68.46	10.5	0.20	14.10	527.75
	72H	72G	72H-72G	0.55	0.32	0.18	0.18	5.00	6.49	1.14	0.00	1.14	526.95	526.43	104.09	0.50	15	0.012	4.95	3.2	0.54	5.00	529.40
	72I	72G	72I-72G	0.25	0.68	0.17	0.17	5.00	6.49	1.10	0.00	1.10	527.55	527.30	28.00	0.89	15	0.012	6.61	3.8	0.12	5.00	531.79
	72P	72G	72P-72G	0.19	0.70	0.13	0.13	5.00	6.49	0.86	0.00	0.86	527.50	527.30	39.79	0.50	15	0.012	4.96	2.9	0.23	5.00	531.98
	72G	72F	72G-72F	0.29	0.70	0.20	0.68	5.00	6.29	4.29	0.00	4.29	526.18	525.95	45.28	0.51	18	0.012	8.11	4.6	0.16	5.54	531.79
	72O	72F	72O-72F	0.22	0.68	0.15	0.15	5.00	6.49	0.97	0.00	0.97	528.13	527.98	30.62	0.49	15	0.012	4.90	3.0	0.17	5.00	531.99
MANHOLE	72F	72E	72F-72E	0.00	0.90	0.00	0.83	5.00	6.23	5.18	0.00	5.18	525.85	525.42	86.55	0.50	18	0.012	8.02	4.8	0.30	5.71	532.08
	72J	72E	72J-72E	0.94	0.45	0.42	0.42	5.00	6.49	2.75	0.00	2.75	528.60	527.00	121.09	1.32	15	0.012	8.04	5.8	0.35	5.00	529.96
	72E	72D	72E-72D	0.23	0.71	0.16	1.42	5.00	6.13	8.70	0.00	8.70	524.92	524.54	75.87	0.50	24	0.012	17.34	5.5	0.23	6.01	533.70
	72L	72K	72L-72K	0.23	0.77	0.18	0.18	5.00	6.49	1.15	0.00	1.15	530.30	530.00	28.00	1.07	15	0.012	7.24	4.0	0.12	5.00	536.89
	72K	72D	72K-72D	0.23	0.72	0.17	0.34	5.00	6.44	2.21	0.00	2.21	529.90	529.30	77.24	0.78	15	0.012	6.17	4.5	0.28	5.12	536.89
MANHOLE	72D	72C	72D-72C	0.00	0.90	0.00	1.76	5.00	6.06	10.67	0.00	10.67	524.44	523.96	95.87	0.50	24	0.012	17.34	5.8	0.28	6.24	535.01
	72C	72B	72C-72B	0.26	0.69	0.18	1.94	5.00	5.98	11.59	0.00	11.59	523.86	522.10	117.89	1.49	24	0.012	29.94	8.9	0.22	6.51	531.13
	72N	72M	72N-72M	0.34	0.67	0.23	0.23	5.00	6.49	1.48	0.00	1.48	523.50	523.30	25.86	0.77	15	0.012	6.15	4.0	0.11	5.00	527.16
	72M	72B	72M-72B	0.43	0.45	0.19	0.42	5.00	6.44	2.71	0.00	2.71	523.20	522.85	59.07	0.59	15	0.012	5.39	4.4	0.22	5.11	526.50
	72B	72A	72B-72A	0.19	0.76	0.14	2.51	5.00	5.91	14.81	0.00	14.81	522.00	520.94	36.76	2.88	24	0.012	41.62	11.9	0.05	6.73	528.03
	72A	72	72A-72	0.18	0.67	0.12	2.63	5.00	5.95	15.63	0.00	15.63	520.84	520.35	28.16	1.74	24	0.012	32.33	10.2	0.05	6.79	525.94
	72	71AA	72-71AA	0.08	0.64	0.05	13.27	5.00	4.40	58.35	0.00	58.35	519.25	518.60	47.92	1.36	36	0.012	84.15	12.9	0.06	14.30	525.94
	71AB	71AA	71AB-71AA	0.25	0.67	0.17	0.17	5.00	6.49	1.09	0.00	1.09	522.85	522.50	28.21	1.24	15	0.012	7.79	4.1	0.11	5.00	526.21
	71AA	71	71AA-71	0.10	0.78	0.08	13.51	5.00	4.39	59.31	0.00	59.31	518.50	516.25	252.18	0.89	36	0.012	68.25	10.9	0.39	14.36	526.24
OUTFALL	71	70	71-70	0.00	0.00	0.00	14.21	5.00	4.33	61.57	0.00	61.57	515.00	514.00	92.03	1.09	36	0.012	75.32	11.9	0.13	14.75	525.56
	114	113	114-113	2.63	0.33	0.87	0.87	5.00	6.49	5.63	0.00	5.63	552.63	551.50	101.50	1.11	18	0.012	12.01	6.6	0.26	5.00	554.26
	113	112	113-112	0.06	0.70	0.04	0.91	5.00	6.39	5.81	0.00	5.81	551.40	549.50	110.40	1.72	18	0.012	14.93	7.9	0.23	5.26	558.26
	112	111	112-111	0.17	0.70	0.12	1.03	5.00	6.31	6.49	0.00	6.49	549.40	549.10	35.00	0.86	18	0.012	10.54	6.3	0.09	5.49	556.15
	111	110	111-110	0.21	0.66	0.14	1.17	5.00	6.28	7.33	0.00	7.33	549.00	547.80	105.71	1.14	18	0.013	11.19	6.8	0.26	5.58	556.15
	110	109	110-109	0.17	0.69	0.12	1.28	5.00	6.19	7.95	0.00	7.95	547.70	546.87	30.00	2.77	18	0.012	18.93	10.2	0.05	5.84	554.34
	109C	109B	109C-109B	1.65	0.35	0.58	0.58	5.00	6.49	3.75	0.00	3.75	549.68	549.20	62.72	0.77	15	0.012	6.12	5.2	0.20	5.00	554.18
	109B	109A	109B-109A	0.91	0.46	0.42	1.00	5.00	6.41	6.38	0.00	6.38	548.03	547.85	35.00	0.51	18	0.012	8.16	5.1	0.11	5.20	554.65
	109A	109	109A-109	0.06	0.70	0.04	1.04	5.00	6.37	6.61	0.00	6.61	547.75	546.87	69.71	1.26	18	0.012	12.79	7.3	0.16	5.31	554.65
MANHOLE	109	108	109-108	0.00	0.90	0.00	2.32	5.00	6.17	14.34	0.00	14.34	546.67	540.81	117.50	4.99	18	0.012	25.41	14.8	0.13	5.89	553.43
	108A	108	108A-108	1.29	0.40	0.52	0.52	5.00	6.49	3.35	0.00	3.35	541.45	541.06	77.50	0.50	15	0.012	4.96	4.3	0.30	5.00	544.20
	108	107	108-107	0.11	0.70	0.08	2.92	5.00	6.18	18.02	0.00	18.02	540.31	538.85	87.50	1.67	24	0.012	31.66	10.4	0.14	6.03	549.03
	107D	107C	107D-107C	0.08	0.70	0.06	0.06	5.00	6.49	0.36	0.00	0.36	544.00	543.75	35.00	0.71	15	0.012	5.91	2.5	0.24	5.00	550.34
	107C	107B	107C-107B	0.17	0.57	0.10	0.15	5.00	6.40	0.98	0.00	0.98	543.65	541.70	135.11	1.44	15	0.012	8.41	4.2	0.54	5.24	550.34
	107B	107A	107B-107A	0.20	0.57	0.11	0.27	5.00	6.21	1.66	0.00	1.66	541.60	539.95	122.39	1.35	15	0.012	8.13	5.0	0.41	5.78	547.04
	107E	107A	107E-107A	0.15	0.79	0.12	0.12	5.00	0.00	0.00	0.00	0.00	540.15	539.95	35.00	0.57	15	0.012	5.29	0.0	0.00	5.00	544.05
	107A	107	107A-107	0.27	0.66	0.18	0.56	5.00	6.08	3.42	0.00	3.42	539.85	539.60	42.43	0.59	15	0.012	5.37	4.6	0.15	6.19	544.05
	107	106	107-106	0.05	0.78	0.04	3.52	5.00	6.08	21.40	0.00	21.40	537.90	537.10	35.00	2.29	24	0.012	37.05	12.3	0.05	6.34	545.61
	106	105	106-105	0.34	0.65	0.22	3.74	5.00	6.07	22.70	0.00	22.70	537.00	531.20	175.99	3.30	24	0.012	44.49	14.3	0.21	6.39	545.61
	105A	105	105A-105	2.69	0.35	0.94	0.94	5.00	6.49	6.11	0.00	6.11	532.29	531.70	117.50	0.50	18	0.012	8.06	5.0	0.39	5.00	535.29
	105	104	105-104	0.26	0.62	0.16	4.84	5.00	6.01	29.09	0.00	29.09	530.60	527.74	94.01	3.04	30	0.012	77.50	14.5	0.11	6.59	538.72
	104A	104	104A-104	0.67	0.54	0.36	0.36	5.00	6.49	2.35	0.00	2.35	529.25	528.99	35.51	0.73	15	0.012	5.99	4.5	0.13	5.00	536.03
	104	103	104-103	0.10	0.50	0.05	5.25	5.00	5.98	31.39	0.00	31.39	527.64	527.30	42.43	0.80	30	0.012	39.78	9.0	0.08	6.70	535.91
	103	102	103-102	0.56	0.66	0.37	5.62	5.00	5.95	33.47	0.00	33.47	527.20	526.90	35.00	0.86	30	0.012	41.14	9.4	0.06	6.78	535.39
	102	101	102-101	0.29	0.69	0.20	5.82	5.00	5.93	34.56	0.00	34.56	526.80	526.40	44.85	0.89	30	0.012	41.96	9.6	0.08	6.84	535.39
	101	100	101-100	0.08	0.43	0.03	5.86	5.00	5.91	34.63	0.00	34.63	526.30	524.60	131.59	1.29	30	0.012	50.51	11.1	0.20	6.92	534.27
	100	99	100-99	0.18	0.75	0.14	5.99	5.00	5.86	35.09	0.00	35.09	524.50	521.90	110.15	2.36	30	0.012	68.27	14.0	0.13	7.12	532.10
	99	98	99-98	0.15	0.65	0.10	6.09	5.00	5.82	35.44	0.00	35.44	521.80	520.88	35.05	2.62	30	0.012	71.99	14.5	0.04	7.25	529.99
	98C	98B	98C-98B	0.94	0.38	0.36	0.36	5.00	6.49	2.32	0.00	2.32	523.90	523.40	86.99	0.57	15	0.012	5.31	4.1	0.35	5.00	526.50
	98B	98A	98B-98A	0.24	0.66	0.16	0.52	5.00	6.36	3.28	0.00	3.28	523.30	523.05	41.58	0.60	15	0.012	5.43	4.6	0.15	5.35	527.31
	98A	98	98A-98	0.24	0.66	0.16	0.67	5.00	6.30	4.25	0.00	4.25	522.95	522.13	141.73	0.58	15	0.012	5.32	4.8	0.49	5.50	527.62
OUTFALL	98	97	98-97	1.31	0.52	0.68	7.45	5.00	5.81	43.24	0.00	43.24	520.38	519.65	145.12	0.50	36	0.012	51.25	8.2	0.30	7.29	529.96
	96F	96E	96F-96E	1.48	0.65	0.96	0.96	5.00	6.49	6.24	0.00	6.24	534.05	533.09	185.65	0.52	18	0.012	8.18	5.1	0.61	5.00	535.68
	96E	96D	96E-96D	0.20	0.69	0.14	1.10	5.00	6.27	6.89	0.00	6.89	532.99	532.80	37.00	0.51	18	0.012	8.15	5.2	0.12	5.61	538.35
	96D	96C	96D-96C	0.20	0.72	0.14	1.24	5.00	6.23	7.75	0.00	7.75	532.70	530.64	151.47	1.36	18	0.012	13.27	7.8	0.32	5.73	538.40
	96I	96C	96I-96C	0.67	0.39	0.26	0.26	5.00	6.49	1.70	0.00	1.70	534.05	530.89	86.88	3.64	15	0.012	13.35	6.9	0.21	5.00	536.80
	96C	96B	96C-96B	0.53	0.70	0.37	1.88	5.00	6.12	11.48	0.00	11.48	530.14	528.60	149.11	1.03	24	0.012	24.91	7.7	0.32	6.05	535.44
	96H	96G	96H-96G	0.24	0.68	0.16	0.16	5.00	6.49	1.06	0.00	1.06	532.08	531.90	28.00	0.64	15	0.012	5.61	3.3	0.14	5.00	538.49
	96G	96B	96G-96B	0.24	0.80	0.19	0.36	5.00	6.43	2.28	0.00	2.28	531.80	529.80	88.12	2.27	15	0.012	10.54	6.5	0.22	5.14	538.49
	96B	96AA	96B-96AA	0.00	0.00	0.00	2.23	5.00	6.02	13.43	0.00	13.43	528.50	526.00	91.31	2.74	24	0.012	40.55	11.4	0.13	6.37	536.29
	96AA	96A	96AA-96A	0.22	0.70	0.15	2.39	5.00	5.98	14.26	0.00	14.26	524.00	521.00	48.89	6.14	24	0.012	60.71	15.3	0.05	6.51	533.31
	96A	96	96A-96	0.00	0.00	0.00	2.39	5.00	5.96	14.22	0.00	14.22	518.50	518.05	75.28	0.60	30	0.012	34.36	6.6	0.19	6.56	526.51
	96	95	96-95	1.20	0.44	0.53	2.91	5.00	5.96	17.37	0.00	17.37	517.95	517.80	28.90	0.52	30	0.012	32.01	6.7	0.07	6.75	522.40
	95E	95D	95E-95D	0.21	0.50	0.11	0.11	5.00	6.49	0.68	0.00	0.68	520.85	520.24	118.08	0.52	15	0.012	5.03	2.7	0.74	5.00	524.66
	95D	95	95D-95	0.18	0.73	0.13	0.24	5.00	6.22	1.47	0.00	1.47	520.14	519.94	37.00	0.54	15	0.012	5.15	3.5	0.18	5.74	523.51
	95B	95A	95B-95A	0.18	0.68	0.12	0.12	5.00	6.49	0.79	0.00	0.79	521.64	519.48	104.61	2.06	15	0.012	10.06	4.3	0.40	5.00	525.09
	95C	95A	95C-95A	0.39	0.69	0.27	0.27	5.00	6.49	1.75	0.00	1.75	519.70	519.48	40.59	0.54	15	0.012	5.15	3.7	0.18	5.00	523.63
	95A	95	95A-95	0.16	0.68	0.11	0.50	5.00	6.34	3.17	0.00	3.17	519.10	518.80	37.80	0.79	18	0.012	10.14	5.0	0.13	5.40	523.55
	95	94	95-94	0.06	0.78	0.05	3.70	5.00	5.94	21.96	0.00	21.96	517.70	517.50	34.66	0.58	30	0.012	33.75	7.4	0.08	6.82	523.38
	94A	94	94A-94	0.39	0.68	0.27	0.27	5.00	6.49	1.72	0.00	1.72	520.13	519.94	18.89	1.01	15	0.012	7.02	4.6	0.07	5.00	523.34
	94	93	94-93	0.00	0.00	0.00	3.96	5.00	5.92	23.44	0.00	23.44	517.40	516.75	123.41	0.53	30	0.012	32.25	7.2	0.29	6.90	522.81
	93A	93	93A-93	0.44	0.54	0.24	0.24	5.00	6.49	1.54	0.00	1.54	518.47	518.30	33.00	0.52	18	0.012	8.17	3.4	0.16	5.00	521.95
	93	92	93-92	0.28	0.61	0.17	4.37	5.00	5.84	25.50	0.00	25.50	516.25	515.46	148.43	0.53	36	0.012	52.71	7.4	0.34	7.19	521.95
	92G	92F	92G-92F	0.38	0.68	0.26	0.26	5.00	6.49	1.68	0.00	1.68	525.25	524.00	58.17	2.15	15	0.012	10.26	5.9	0.17	5.00	530.61
	92F	92B	92F-92B	0.00	0.00	0.00	0.26	5.00	6.42	1.66	0.00	1.66	523.90	522.25	76.80	2.15	15	0.012	10.26	5.9	0.22	5.17	529.46
	92D	92C	92D-92C	1.10	0.39	0.43	0.43	5.00	6.49	2.78	0.00	2.78	518.95	518.50	90.04	0.50	15	0.012	4.95	4.2	0.36	5.00	521.70
	92C	92B	92C-92B	0.40	0.70	0.28	0.71	5.00	6.35	4.50	0.00	4.50	518.25	518.08	33.00	0.52	18	0.012	8.17	4.8	0.12	5.36	527.67
	92B	92A	92B-92A	0.22	0.68	0.15	1.12	5.00	6.31	7.05	0.00	7.05	517.98	517.38	119.25	0.50	18	0.012	8.07	5.2	0.38	5.48	527.67
	92E	92A	92E-92A	0.07	0.75	0.05	0.05	5.00	6.49	0.34	0.00	0.34	517.80	517.63	33.00	0.52	15	0.012	5.02	2.1	0.26	5.00	524.79
	92A	92	92A-92	0.18	0.68	0.12	1.29	5.00	6.18	7.99	0.00	7.99	516.88	516.46	63.00	0.67	24	0.012	20.01	5.9	0.18	5.86	524.80
	92	91	92-91	0.09	0.65	0.06	5.72	5.00	5.74	32.86	0.00	32.86	515.36	514.90	91.69	0.50	36	0.012	51.18	7.7	0.20	7.52	523.33
	91C	91	91C-91	0.19	0.65	0.12	0.12	5.00	6.49	0.80	0.00	0.80	518.25	517.50	97.11	0.77	15	0.012	6.15	3.3	0.50	5.00	523.42
	91B	91A	91B-91A	0.83	0.69	0.57	0.57	5.00	6.49	3.72	0.00	3.72	518.85	518.10	118.54	0.63	15	0.012	5.57	4.9	0.41	5.00	521.60
	91A	91	91A-91	0.46	0.69	0.32	0.89	5.00	6.34	5.64	0.00	5.64	518.00	517.50	33.00	1.52	15	0.012	8.61	7.5	0.07	5.41	522.41
OUTFALL	91	90	91-90	0.30	0.65	0.20	6.93	5.00	5.69	39.43	0.00	39.43	514.80	514.00	156.32	0.51	36	0.012	51.69	8.0	0.32	7.72	522.41

HYDRAULIC GRADE LINE COMPUTATIONS

Reference Note	Inlet Station Up	Inlet Station Down	Outlet Water Surface Elev.	0.8D or 10yr WSEL	D_0	Q_0	L_0	% Full	r (ft)	A (ft^2) full	P (ft) full	R_h (ft) full	S ft/ft	S_{f0} % full	H_f
0	1	1A	2	2A	3	4	5	5A	5B	5C	5D	5E	5F	6	7
OUTFALL	2	1	514.27	0.8d	30x19	10.29	38.24	0.67	0.79	3.11	6.50	0.48	0.50	0.22%	0.09
	2A	2	514.62	0.8d	15	0.81	35.75	0.16	0.63	1.23	3.93	0.31	0.53	0.01%	0.00
	3	2	514.56	0.8d	30x19	8.86	35.00	0.57	0.79	3.11	6.50	0.48	0.51	0.17%	0.06
	3A	3	514.82	0.8d	15	0.76	35.75	0.15	0.63	1.23	3.93	0.31	0.50	0.01%	0.00
	4	3	514.81	WSE	18	7.14	256.65	0.77	0.75	1.77	4.71	0.38	0.67	0.39%	1.01
	5	4	516.53	0.8d	15	4.80	194.46	0.58	0.63	1.23	3.93	0.31	1.40	0.47%	0.91
	4A	4	516.53	0.8d	15	1.21	41.44	0.24	0.63	1.23	3.93	0.31	0.51	0.03%	0.01
	4B	4A	516.84	0.8d	15	0.43	44.05	0.08	0.63	1.23	3.93	0.31	0.59	0.00%	0.00
	5	4	516.53	0.8d	15	4.80	194.46	0.58	0.63	1.23	3.93	0.31	1.40	0.47%	0.91
	5A	5	519.55	0.8d	15	1.05	35.00	0.21	0.63	1.23	3.93	0.31	0.51	0.02%	0.01
	6	5	519.35	0.8d	15	2.69	172.22	0.19	0.63	1.23	3.93	0.31	4.17	0.15%	0.25
	6A	6	526.60	0.8d	15	1.25	46.72	0.25	0.63	1.23	3.93	0.31	0.49	0.03%	0.01
	7	6	526.60	0.8d	15	0.12	179.50	0.01	0.63	1.23	3.93	0.31	4.68	0.00%	0.00
OUTFALL	11	10	510.60	0.8d	24	14.28	109.01	0.49	1.00	3.14	6.28	0.50	1.40	0.34%	0.37
	11A	11	512.38	0.8d	15	1.86	66.67	0.37	0.63	1.23	3.93	0.31	0.51	0.07%	0.05
	11B	11A	512.82	0.8d	15	0.52	22.71	0.08	0.63	1.23	3.93	0.31	0.79	0.01%	0.00
	11C	11A	512.82	0.8d	15	1.36	66.12	0.12	0.63	1.23	3.93	0.31	2.54	0.04%	0.03
	12	11	512.23	0.8d	24	12.55	21.81	0.53	1.00	3.14	6.28	0.50	0.92	0.26%	0.06
	12A	12	513.43	0.8d	15	3.80	35.00	0.76	0.63	1.23	3.93	0.31	0.51	0.29%	0.10
	13	12	512.53	0.8d	18	7.62	128.95	0.78	0.75	1.77	4.71	0.38	0.74	0.45%	0.58
	13A	13	513.53	WSE	15	4.54	35.85	0.89	0.63	1.23	3.93	0.31	0.53	0.42%	0.15
	13B	13A	513.86	WSE	15	4.07	150.37	0.76	0.63	1.23	3.93	0.31	0.59	0.34%	0.51
	14	13	513.53	WSE	15	2.78	115.05	0.37	0.63	1.23	3.93	0.31	1.17	0.16%	0.18
	15	14	514.98	0.8d	15	2.59	35.01	0.52	0.63	1.23	3.93	0.31	0.51	0.14%	0.05
	16	15	515.26	0.8d	15	2.41	44.05	0.47	0.63	1.23	3.93	0.31	0.54	0.12%	0.05
	17	16	515.50	0.8d	15	0.94	27.99	0.14	0.63	1.23	3.93	0.31	0.89	0.02%	0.01
OUTFALL	21	20	514.00	0.8d	15	3.58	31.50	0.72	0.63	1.23	3.93	0.31	0.51	0.26%	0.08
	21A	21	515.20	0.8d	15	0.85	35.00	0.16	0.63	1.23	3.93	0.31	0.57	0.01%	0.01
	22	21	514.28	WSE	15	2.04	79.29	0.41	0.63	1.23	3.93	0.31	0.50	0.08%	0.07
	23	22	514.76	0.8d	15	1.14	35.00	0.23	0.63	1.23	3.93	0.31	0.51	0.03%	0.01
	24	23	515.04	0.8d	15	0.73	45.12	0.14	0.63	1.23	3.93	0.31	0.58	0.01%	0.00
OUTFALL	31	30	516.00	0.8d	15	4.45	49.14	0.23	0.63	1.23	3.93	0.31	7.63	0.40%	0.20
	32	31	521.40	0.8d	15	3.82	35.29	0.28	0.63	1.23	3.93	0.31	3.68	0.30%	0.11
	33	32	524.75	0.8d	15	2.24	128.93	0.16	0.63	1.23	3.93	0.31	3.99	0.10%	0.13
	34	33	530.00	0.8d	15	1.85	55.02	0.25	0.63	1.23	3.93	0.31	1.09	0.07%	0.04
	35	34	530.70	0.8d	15	1.87	35.75	0.36	0.63	1.23	3.93	0.31	0.56	0.07%	0.03
OUTFALL	41	40	515.00	0.8d	15	1.75	42.17	0.09	0.63	1.23	3.93	0.31	8.54	0.06%	0.03
	42	41	518.70	0.8d	15	1.11	35.00	0.21	0.63	1.23	3.93	0.31	0.57	0.03%	0.01
OUTFALL	71	70	516.40	0.8d	36	61.57	92.03	0.82	1.50	7.07	9.42	0.75	1.09	0.73%	0.67
	71A	71	520.00	0.8d	15	4.40	110.88	0.36	0.63	1.23	3.93	0.31	3.07	0.39%	0.44
	71B	71A	523.50	0.8d	15	3.15	37.01	0.61	0.63	1.23	3.93	0.31	0.54	0.20%	0.07
	71C	71B	523.80	0.8d	15	1.88	67.03	0.37	0.63	1.23	3.93	0.31	0.52	0.07%	0.05
	71AA	71	518.65	0.8d	36	59.31	252.18	0.87	1.50	7.07	9.42	0.75	0.89	0.67%	1.70
	71AB	71AA	523.50	0.8d	15	1.09	28.21	0.14	0.63	1.23	3.93	0.31	1.24	0.02%	0.01
	72	71AA	521.00	0.8d	36	58.35	47.92	0.69	1.50	7.07	9.42	0.75	1.36	0.65%	0.31
	72A	72	521.95	0.8d	24	15.63	28.16	0.48	1.00	3.14	6.28	0.50	1.74	0.41%	0.11
	72B	72A	522.54	0.8d	24	14.81	36.76	0.36	1.00	3.14	6.28	0.50	2.88	0.37%	0.13
	72M	72B	523.85	0.8d	15	2.71	59.07	0.50	0.63	1.23	3.93	0.31	0.59	0.15%	0.09
	72N	72M	524.30	0.8d	15	1.48	25.86	0.24	0.63	1.23	3.93	0.31	0.77	0.04%	0.01
	72C	72B	523.70	0.8d	24	11.59	117.89	0.39	1.00	3.14	6.28	0.50	1.49	0.22%	0.26
	72D	72C	525.56	0.8d	24	10.67	95.87	0.62	1.00	3.14	6.28	0.50	0.50	0.19%	0.18
	72K	72D	530.30	0.8d	15	2.21	77.24	0.36	0.63	1.23	3.93	0.31	0.78	0.10%	0.08
	72L	72K	531.00	0.8d	15	1.15	28.00	0.16	0.63	1.23	3.93	0.31	1.07	0.03%	0.01
	72E	72D	526.14	0.8d	24	8.70	75.87	0.50	1.00	3.14	6.28	0.50	0.50	0.13%	0.10
	72J	72E	528.00	0.8d	15	2.75	121.09	0.34	0.63	1.23	3.93	0.31	1.32	0.15%	0.19
	72F	72E	526.62	0.8d	18	5.18	86.55	0.65	0.75	1.77	4.71	0.38	0.50	0.21%	0.18
	72O	72F	528.98	0.8d	15	0.97	30.62	0.20	0.63	1.23	3.93	0.31	0.49	0.02%	0.01
	72G	72F	527.15	0.8d	18	4.29	45.28	0.53	0.75	1.77	4.71	0.38	0.51	0.14%	0.06
	72I	72G	528.30	0.8d	15	1.10	28.00	0.17	0.63	1.23	3.93	0.31	0.89	0.02%	0.01
	72P	72G	528.30	0.8d	15	0.86	39.79	0.17	0.63	1.23	3.93	0.31	0.50	0.02%	0.01
	72H	72G	527.43	0.8d	15	1.14	104.09	0.23	0.63	1.23	3.93	0.31	0.50	0.03%	0.03
	73	72	521.75	0.8d	36	46.90	128.11	0.69	1.50	7.07	9.42	0.75	0.90	0.42%	0.54
	74	73	523.00	0.8d	36	46.85	53.70	0.67	1.50	7.07	9.42	0.75	0.93	0.42%	0.23
	74A	74	523.95	0.8d	15	1.28	97.55	0.10	0.63	1.23	3.93	0.31	3.33	0.03%	0.03
	74B	74A	527.30	0.8d	15	0.78	37.83	0.15	0.63	1.23	3.93	0.31	0.53	0.01%	0.00
	75	74	523.74	WSE	36	46.00	115.23	0.65	1.50	7.07	9.42	0.75	0.95	0.41%	0.47
	76	75	524.80	0.8d	36	44.62	77.64	0.52	1.50	7.07	9.42	0.75	1.42	0.38%	0.30
	77	76	526.04	WSE	36	44.21	161.94	0.70	1.50	7.07	9.42	0.75	0.77	0.37%	0.61
	78	77	527.34	0.8d	36	43.98	35.18	0.85	1.50	7.07	9.42	0.75	0.51	0.37%	0.13
	78A	78	527.97	0.8d	15	2.86	39.13	0.26	0.63	1.23	3.93	0.31	2.38	0.17%	0.07
	78B	78A	529.00	0.8d	15	1.21	37.56	0.24	0.63	1.23	3.93	0.31	0.53	0.03%	0.01
	78C	78B	529.30	0.8d	15	0.66	83.31	0.07	0.63	1.23	3.93	0.31	2.04	0.01%	0.01
	79	78	527.92	WSE	36	41.73	75.13	0.72	1.50	7.07	9.42	0.75	0.64	0.33%	0.25
	79A	79	531.61	0.8d	24	12.02	87.56	0.55	1.00	3.14	6.28	0.50	0.79	0.24%	0.21
	80	79	528.59	WSE	30	30.02	37.25	0.92	1.25	4.91	7.85	0.63	0.54	0.46%	0.17
	80A	80	529.21	WSE	15	1.68	28.52	0.33	0.63	1.23	3.93	0.31	0.53	0.06%	0.02
	81	80	530.40	0.8d	30	28.93	58.75	0.53	1.25	4.91	7.85	0.63	1.53	0.42%	0.25
	82	81	532.00	0.8d	30	28.96	40.03	0.65	1.25	4.91	7.85	0.63	1.00	0.42%	0.17
OUTFALL	91	90	516.40	0.8d	36	39.43	156.32	0.76	1.50	7.07	9.42	0.75	0.51	0.30%	0.47
	91A	91	518.50	0.8d	15	5.64	33.00	0.65	0.63	1.23	3.93	0.31	1.52	0.65%	0.21
	91B	91A	519.10	0.8d	15	3.72	118.54	0.67	0.63	1.23	3.93	0.31	0.63	0.28%	0.33
	91C	91	518.50	0.8d	15	0.80	97.11	0.13	0.63	1.23	3.93	0.31	0.77	0.01%	0.01
	92	91	517.65	WSE	36	32.86	91.69	0.64	1.50	7.07	9.42	0.75	0.50	0.21%	0.19
	92A	92	518.36	WSE	24	7.99	63.00	0.40	1.00	3.14	6.28	0.50	0.67	0.11%	0.07
	92E	92A	518.63	0.8d	15	0.34	33.00	0.07	0.63	1.23	3.93	0.31	0.52	0.00%	0.00
	92B	92A	518.58	0.8d	18	7.05	119.25	0.87	0.75	1.77	4.71	0.38	0.50	0.38%	0.46
	92C	92B	519.28	0.8d	18	4.50	33.00	0.55	0.75	1.77	4.71	0.38	0.52	0.16%	0.05
	92D	92C	519.50	0.8d	15	2.78	90.04	0.56	0.63	1.23	3.93	0.31	0.50	0.16%	0.14
	92F	92B	523.25	0.8d	15	1.66	76.80	0.16	0.63	1.23	3.93	0.31	2.15	0.06%	0.04
	92G	92F	525.00	0.8d	15	1.68	58.17	0.16	0.63	1.23	3.93	0.31	2.15	0.06%	0.03
	93	92	518.36	WSE	36	25.50	148.43	0.48	1.50	7.07	9.42	0.75	0.53	0.12%	0.18
	93A	93	519.50	0.8d	18	1.54	33.00	0.19	0.75	1.77	4.71	0.38	0.52	0.02%	0.01
	94	93	518.75	0.8d	30	23.44	123.41	0.73	1.25	4.91	7.85	0.63	0.53	0.28%	0.34
	94A	94	520.94	0.8d	15	1.72	18.89	0.25	0.63	1.23	3.93	0.31	1.01	0.06%	0.01
	95	94	519.51	WSE	30	21.96	34.66	0.65	1.25	4.91	7.85	0.63	0.58	0.24%	0.08
	95A	95	520.00	0.8d	18	3.17	37.80	0.31	0.75	1.77	4.71	0.38	0.79	0.08%	0.03
	95B	95A	520.48	0.8d	15	0.79	104.61	0.08	0.63	1.23	3.93	0.31	2.06	0.01%	0.01
	95C	95A	520.48	0.8d	15	1.75	40.59	0.34	0.63	1.23	3.93	0.31	0.54	0.06%	0.03
	95D	95	520.94	0.8d	15	1.47	37.00	0.29	0.63	1.23	3.93	0.31	0.54	0.04%	0.02
	95E	95D	521.24	0.8d	15	0.68	118.08	0.14	0.63	1.23	3.93	0.31	0.52	0.01%	0.01
	96	95	519.80	0.8d	30	17.37	28.90	0.54	1.25	4.91	7.85	0.63	0.52	0.15%	0.04
	96A	96	520.05	0.8d	30	14.22	75.28	0.41	1.25	4.91	7.85	0.63	0.60	0.10%	0.08
	96AA	96A	522.60	0.8d	24	14.26	48.89	0.23	1.00	3.14	6.28	0.50	6.14	0.34%	0.17
	96B	96AA	527.60	0.8d	24	13.43	91.31	0.33	1.00	3.14	6.28	0.50	2.74	0.30%	0.27
	96G	96B	530.80	0.8d	15	2.28	88.12	0.22	0.63	1.23	3.93	0.31	2.27	0.11%	0.09
	96H	96G	532.90	0.8d	15	1.06	28.00	0.19	0.63	1.23	3.93	0.31	0.64	0.02%	0.01
	96C	96B	530.20	0.8d	24	11.48	149.11	0.46	1.00	3.14	6.28	0.50	1.03	0.22%	0.33
	96I	96C	531.89	0.8d	15	1.70	86.88	0.13	0.63	1.23	3.93	0.31	3.64	0.06%	0.05
	96D	96C	531.84	0.8d	18	7.75	151.47	0.58	0.75	1.77	4.71	0.38	1.36	0.46%	0.70
	96E	96D	534.00	0.8d	18	6.89	37.00	0.85	0.75	1.77	4.71	0.38	0.51	0.37%	0.14
	96F	96E	534.29	0.8d	18	6.24	185.65	0.76	0.75	1.77	4.71	0.38	0.52	0.30%	0.56
OUTFALL	98	97	522.05	0.8d	36	43.24	145.12	0.84	1.50	7.07	9.42	0.75	0.50	0.36%	0.52
	98A	98	523.13	0.8d	15	4.25	141.73	0.80	0.63	1.23	3.93	0.31	0.58	0.37%	0.52
	98B	98A	524.05	0.8d	15	3.28	41.58	0.60	0.63	1.23	3.93	0.31	0.60	0.22%	0.09
	98C	98B	524.40	0.8d	15	2.32	86.99	0.44	0.63	1.23	3.93	0.31	0.57	0.11%	0.10
	99	98	522.88	0.8d	30	35.44	35.05	0.49	1.25	4.91	7.85	0.63	2.62	0.64%	0.22
	100	99	523.90	0.8d	30	35.09	110.15	0.51	1.25	4.91	7.85	0.63	2.36	0.62%	0.69
	101	100	526.60	0.8d	30	34.63	131.59	0.69	1.25	4.91	7.85	0.63	1.29	0.61%	0.80
	102	101	528.40	0.8d	30	34.56	44.85	0.82	1.25	4.91	7.85	0.63	0.89	0.61%	0.27
	103	102	529.17	WSE	30	33.47	35.00	0.81	1.25	4.91	7.85	0.63	0.86	0.57%	0.20
	104	103	529.82	WSE	30	31.39	42.43	0.79	1.25	4.91	7.85	0.63	0.80	0.50%	0.21
	104A	104	530.43	WSE	15	2.35	35.51	0.39	0.63	1.23	3.93	0.31	0.73	0.11%	0.04
	105	104	530.43	WSE	30	29.09	94.01	0.38	1.25	4.91	7.85	0.63	3.04	0.43%	0.40
	105A	105	532.90	0.8d	18	6.11	117.50	0.76	0.75	1.77	4.71	0.38	0.50	0.29%	0.34
	106	105	532.80	0.8d	24	22.70	175.99	0.51	1.00	3.14	6.28	0.50	3.30	0.86%	1.51
	107	106	538.70	0.8d	24	21.40	35.00	0.58	1.00	3.14	6.28	0.50	2.29	0.76%	0.27
	107A	107	540.60	0.8d	15	3.42	42.43	0.64	0.63	1.23	3.93	0.31	0.59	0.24%	0.10
	107E	107A	540.96	WSE	15	0.00	35.00	0.00	0.63	1.23	3.93	0.31	0.57	0.00%	0.00
	107B	107A	540.96	WSE	15	1.66	122.39	0.20	0.63	1.23	3.93	0.31	1.35	0.06%	0.07
	107C	107B	542.70	0.8d	15	0.98	135.11	0.12	0.63	1.23	3.93	0.31	1.44	0.02%	0.03
	107D	107C	544.75	0.8d	15	0.36	35.00	0.06	0.63	1.23	3.93	0.31	0.71	0.00%	0.00
	108	107	540.45	0.8d	24	18.02	87.50	0.57	1.00	3.14	6.28	0.50	1.67	0.54%	0.47
	108A	108	542.06	0.8d	15	3.35	77.50	0.67	0.63	1.23	3.93	0.31	0.50	0.23%	0.18
	109	108	542.01	0.8d	18	14.34	117.50	0.56	0.75	1.77	4.71	0.38	4.99	1.59%	1.87
	109A	109	548.07	0.8d	18	6.61	69.71	0.52	0.75	1.77	4.71	0.38	1.26	0.34%	0.24
	109B	109A	549.05	0.8d	18	6.38	35.00	0.78	0.75	1.77	4.71	0.38	0.51	0.31%	0.11
	109C	109B	550.20	0.8d	15	3.75	62.72	0.61	0.63	1.23	3.93	0.31	0.77	0.29%	0.18
	110	109	548.07	0.8d	18	7.95	30.00	0.42	0.75	1.77	4.71	0.38	2.77	0.49%	0.15
	111	110	549.00	0.8d	18	7.33	105.71	0.65	0.75	1.77	4.71	0.38	1.14	0.49%	0.51
	112	111	550.30	0.8d	18	6.49	35.00	0.62	0.75	1.77	4.71	0.38	0.86	0.33%	0.11
	113	112	550.70	0.8d	18	5.81	110.40	0.39	0.75	1.77	4.71	0.38	1.72	0.26%	0.29
	114	113	552.70	0.8d	18	5.63	101.50	0.47	0.75	1.77	4.71	0.38	1.11	0.25%	0.25

Up	Down	V_0	H_0 Loss Coefficient k	H_0	Q_i	V_i	V_iQ_i	$V_i^2/2g$	H_i	Angle	K	H_Δ	H_t	1.3 H_t	0.5 H_t	0.5 IS-1 Applicable	Final H	Inlet Water Surface Elev.	Inlet Invert + 0.8D Elev.	Rim/Flow Line Elev.	Remarks	Check for Pressure Flow
1	1A	8	9A	9	10	11	12	12A	13	14	14a	15	16	17	18	18A	19	20	20A	B	C	D
2	1	5.27	0.25	0.11	8.86	2.85	25.24	0.13	0.04	27	0.319	0.04	0.19	0.25	0.13	Y	0.21	514.48	514.46	516.84	Curb Inlet	Open Channel
2A	2	2.83	0.30	0.04							0.000	0	0.04	0.05	0.02	Y	0.03	514.65	514.81	516.72	Curb Inlet	Open Channel
3	2	2.85	0.25	0.03	7.14	4.04	41.26	0.25	0.09	90	0.700	0.177	0.30	0.39	0.19	Y	0.25	514.81	514.74	516.84	Curb Inlet	Open Channel
3A	3	2.75	0.30	0.04							0.000	0	0.04	0.05	0.02	Y	0.03	514.85	515.00	516.72	Curb Inlet	Open Channel
4	3	5.78	0.25	0.13	4.80	7.01	33.67	0.76	0.27	0	0.000	0	0.40	0.52	0.26	Y	1.27	516.08	516.48	519.39	Curb Inlet	Open Channel
5	4	7.01	0.25	0.19	2.69	8.50	22.84	1.12	0.39	1	0.012	0.013	0.60	0.78	0.39	Y	1.30	517.83	519.25	521.89	Curb Inlet	Open Channel
4A	4	3.25	0.25	0.04	0.43	2.41	1.04	0.09	0.03	83	0.672	0.061	0.13	0.17	0.09	Y	0.10	516.63	516.74	519.61	Curb Inlet	Open Channel
4B	4A	2.41	0.30	0.03							0.000	0	0.03	0.04	0.02	Y	0.02	516.86	517.10	518.64	Curb Inlet	Open Channel
5	4	7.01	0.25	0.19	2.69	8.50	22.84	1.12	0.39	1	0.012	0.013	0.60	0.78	0.39	Y	1.30	517.83	519.25	521.89	Curb Inlet	Open Channel
5A	5	3.11	0.30	0.04							0.000	0	0.04	0.06	0.03	Y	0.04	519.59	519.73	521.89	Curb Inlet	Open Channel
6	5	8.50	0.25	0.28	1.25	3.24	4.05	0.16	0.06	92	0.000	0	0.34	0.44	0.22	Y	0.47	519.82	526.53	528.79	Curb Inlet	Open Channel
6A	6	3.24	0.30	0.05							0.000	0	0.05	0.06	0.03	Y	0.05	526.65	526.83	529.01	Curb Inlet	Open Channel
7	6	0.00	0.30	0.00							0.000	0	0.00	0.00	0.00	Y	0.00	526.60	535.00	536.25	Grate Inlet	Open Channel
11	10	4.54	0.25	0.08	12.55	3.99	50.11	0.25	0.09	39	0.422	0.105	0.27	0.35	0.00	N	0.72	511.32	512.13	516.60	Manhole	Open Channel
11A	11	1.52	0.25	0.01	1.36	1.11	7.80	0.02	0.01	79	0.655	0.013	0.03	0.04	0.00	N	0.08	512.46	512.72	517.19	Manhole	Open Channel
11B	11A	2.79	0.50	0.06							0.000	0	0.06	0.08	0.04	Y	0.04	512.86	513.00	-	End Section	Open Channel
11C	11A	5.73	0.50	0.25							0.000	0	0.25	0.33	0.00		0.36	513.18	514.50	-	End Section	Open Channel
12	11	3.99	0.25	0.06	7.62	4.31	46.74	0.29	0.10	19	0.238	0.069	0.23	0.30	0.15	Y	0.21	512.44	512.43	515.81	Curb Inlet	Open Channel
12A	12	4.50	0.25	0.08							0.000	0	0.08	0.10	0.05	Y	0.15	513.58	513.61	515.81	Curb Inlet	Open Channel
13	12	6.14	0.25	0.15	4.54	5.62	21.46	0.49	0.17	87	0.688	0.338	0.66	0.85	0.43	Y	1.00	513.53	513.48	517.54	Curb Inlet	Open Channel
13A	13	4.73	0.25	0.09	4.07	4.80	19.54	0.36	0.13	12	0.154	0.055	0.27	0.35	0.17	Y	0.32	513.86	513.72	517.40	Curb Inlet	Open Channel
13B	13A	4.80	0.30	0.11							0.000	0	0.11	0.14	0.07	Y	0.58	514.44	514.70	515.81	Grate Inlet	Open Channel
14	13	5.62	0.25	0.12	2.59	4.13	10.68	0.26	0.09	77	0.645	0.171	0.39	0.50	0.25	Y	0.43	513.97	514.88	518.43	Curb Inlet	Open Channel
15	14	4.13	0.25	0.07	2.41	4.08	9.83	0.26	0.09	49	0.493	0.128	0.28	0.37	0.18	Y	0.23	515.21	515.16	518.42	Curb Inlet	Open Channel
16	15	4.08	0.25	0.06	0.94	3.61	3.40	0.20	0.07	9	0.116	0.023	0.16	0.21	0.10	Y	0.16	515.42	515.50	517.46	Curb Inlet	Open Channel
17	16	3.61	0.30	0.06							0.000	0	0.06	0.08	0.04	Y	0.04	515.54	515.75	518.06	Curb Inlet	Open Channel
21	20	4.43	0.25	0.08	2.04	3.77	7.67	0.22	0.08	90	0.700	0.154	0.31	0.40	0.20	Y	0.28	514.28	514.16	517.63	Curb Inlet	Open Channel
21A	21	3.02	0.30	0.04							0.000	0	0.04	0.06	0.03	Y	0.03	515.23	515.40	517.63	Curb Inlet	Open Channel
22	21	3.77	0.25	0.06	1.14	3.15	3.58	0.15	0.05	90	0.700	0.108	0.22	0.28	0.14	Y	0.21	514.49	514.66	517.11	Curb Inlet	Open Channel
23	22	3.15	0.25	0.04	0.73	2.81	2.05	0.12	0.04	90	0.700	0.086	0.17	0.22	0.11	Y	0.12	514.88	514.94	517.11	Curb Inlet	Open Channel
24	23	2.81	0.30	0.04							0.000	0	0.04	0.05	0.02	Y	0.03	515.07	515.30	517.28	Curb Inlet	Open Channel
31	30	12.13	0.25	0.57	3.82	9.19	35.12	1.31	0.46	24	0.289	0.379	1.41	1.83	0.92	Y	1.11	517.11	519.75	527.71	Curb Inlet	Open Channel
32	31	9.19	0.25	0.33	2.24	7.98	17.86	0.99	0.35	84	0.676	0.668	1.34	1.74	0.87	Y	0.98	522.38	522.70	527.89	Curb Inlet	Open Channel
33	32	7.98	0.25	0.25	1.85	4.82	8.93	0.36	0.13	0	0.000	0	0.37	0.49	0.24	Y	0.37	525.12	529.90	533.00	Curb Inlet	Open Channel
34	33	4.82	0.25	0.09	1.87	3.84	7.18	0.23	0.08	68	0.600	0.137	0.31	0.40	0.20	Y	0.24	530.24	530.60	535.19	Curb Inlet	Open Channel
35	34	3.84	0.30	0.07							0.000	0	0.07	0.09	0.04	Y	0.07	530.77	530.90	533.49	Curb Inlet	Open Channel
41	40	9.16	0.25	0.33	1.11	3.23	3.58	0.16	0.06	18	0.226	0.037	0.42	0.55	0.27	Y	0.30	515.30	518.60	521.13	Curb Inlet	Open Channel
42	41	3.23	0.30	0.05							0.000	0	0.05	0.06	0.03	Y	0.04	518.74	518.90	521.13	Curb Inlet	Open Channel
71	70	8.71	0.25	0.29	59.31	8.39	497.65	1.09	0.38	17	0.214	0.234	0.91	1.18	0.00	N	1.85	518.25	517.40	525.56	Manhole	Pressure Flow
71A	71	3.58	0.25	0.05	3.15	2.56	13.85	0.10	0.04	55	0.530	0.054	0.14	0.18	0.09	Y	0.53	520.53	523.40	530.00	Curb Inlet	Open Channel
71B	71A	4.40	0.25	0.08	1.88	3.79	7.14	0.22	0.08	16	0.202	0.045	0.20	0.26	0.13	Y	0.20	523.70	523.70	529.92	Curb Inlet	Open Channel
71C	71B	3.79	0.30	0.07							0.000	0	0.07	0.09	0.04	Y	0.09	523.89	524.15	525.90	Grate Inlet	Open Channel
71AA	71	8.39	0.25	0.27	58.35	8.26	481.72	1.06	0.37	4	0.048	0.051	0.69	0.90	0.45	Y	2.15	520.80	520.90	525.57	Curb Inlet	Open Channel
71AB	71AA	4.13	0.30	0.08							0.000	0	0.08	0.10	0.05	Y	0.06	523.56	523.85	525.54	Curb Inlet	Open Channel
72	71AA	8.26	0.25	0.26	46.90	6.63	490.52	0.68	0.24	4	0.048	0.033	0.54	0.70	0.35	Y	0.66	521.66	521.65	525.27	Curb Inlet	Open Channel
72A	72	4.97	0.25	0.10	14.81	4.71	176.52	0.34	0.12	26	0.309	0.107	0.32	0.42	0.21	Y	0.32	522.27	522.44	525.27	Curb Inlet	Open Channel
72B	72A	11.92	0.30	0.66	11.59	8.86	102.76	1.22	0.43	0	0.000	0	1.09	1.42	0.71	Y	0.84	523.38	523.60	527.36	Curb Inlet	Open Channel
72M	72B	4.39	0.25	0.07	1.48	4.01	5.93	0.25	0.09	42	0.444	0.111	0.27	0.36	0.18	Y	0.27	524.12	524.20	525.83	Curb Inlet	Open Channel
72N	72M	4.01	0.30	0.07							0.000	0	0.07	0.10	0.05	Y	0.06	524.36	524.50	527.16	Grate Inlet	Open Channel
72C	72B	8.86	0.25	0.31	10.67	3.40	36.25	0.18	0.06	34	0.382	0.068	0.44	0.57	0.28	Y	0.55	524.25	525.46	530.46	Curb Inlet	Open Channel
72D	72C	3.40	0.25	0.04	8.70	2.93	48.02	0.13	0.05	56	0.536	0.072	0.16	0.21	0.00	N	0.39	525.95	526.04	535.01	Manhole	Open Channel
72K	72D	4.52	0.25	0.08	1.15	4.01	4.61	0.25	0.09	78	0.650	0.163	0.33	0.43	0.21	Y	0.29	530.59	530.90	536.89	Grate Inlet	Open Channel
72L	72K	4.01	0.30	0.08							0.000	0	0.08	0.10	0.05	Y	0.06	531.06	531.30	536.89	Grate Inlet	Open Channel
72E	72D	5.52	0.25	0.12	5.18	5.83	24.94	0.53	0.18	41	0.437	0.231	0.53	0.69	0.35	Y	0.44	526.58	526.52	533.03	Curb Inlet	Open Channel
72J	72E	5.83	0.50	0.26							0.000	0	0.26	0.34	0.17	Y	0.36	528.36	529.60	-	End Section	Open Channel
72F	72E	4.81	0.25	0.09	4.29	2.95	10.41	0.14	0.05	13	0.166	0.022	0.16	0.21	0.00	N	0.39	527.01	527.05	532.08	Manhole	Open Channel
72O	72F	2.95	0.30	0.04							0.000	0	0.04	0.05	0.03	Y	0.03	529.01	529.13	531.32	Curb Inlet	Open Channel
72G	72F	2.43	0.25	0.02	1.14	0.93	4.16	0.01	0.00	90	0.700	0.009	0.04	0.05	0.02	Y	0.09	527.24	527.38	531.12	Curb Inlet	Open Channel
72I	72G	3.77	0.30	0.07							0.000	0	0.07	0.09	0.04	Y	0.05	528.35	528.55	531.12	Curb Inlet	Open Channel
72P	72G	2.87	0.30	0.04							0.000	0	0.04	0.05	0.02	Y	0.03	528.33	528.50	531.31	Curb Inlet	Open Channel
72H	72G	3.18	0.30	0.05							0.000	0	0.05	0.06	0.03	Y	0.06	527.49	527.95	529.40	Grate Inlet	Open Channel
73	72	10.46	0.25	0.42	46.85	6.63	310.52	0.68	0.24	4	0.048	0.033	0.70	0.91	0.45	Y	0.99	522.74	522.90	527.08	Curb Inlet	Open Channel
74	73	6.63	0.25	0.17	46.00	6.51	299.32	0.66	0.23	67	0.595	0.391	0.79	1.03	0.51	Y	0.74	523.74	523.50	528.78	Curb Inlet	Open Channel
74A	74	6.25	0.25	0.15	0.78	2.82	2.21	0.12	0.04	67	0.595	0.073	0.27	0.35	0.17	Y	0.21	524.16	527.20	531.86	Curb Inlet	Open Channel
74B	74A	2.82	0.30	0.04							0.000	0	0.04	0.05	0.02	Y	0.03	527.33	527.50	532.35	Curb Inlet	Open Channel
75	74	6.51	0.25	0.16	44.62	6.31	548.35	0.62	0.22	37	0.406	0.251	0.63	0.82	0.41	Y	0.88	524.62	524.70	528.91	Grate Inlet	Open Channel
76	75	12.29	0.25	0.59	44.21	9.66	427.08	1.45	0.51	20	0.250	0.362	1.46	1.89	0.95	Y	1.24	526.04	525.90	530.55	Curb Inlet	Open Channel
77	76	9.66	0.25	0.36	43.98	6.22	273.61	0.60	0.21	78	0.650	0.391	0.96	1.25	0.63	Y	1.23	527.27	527.24	532.99	Curb Inlet	Open Channel
78	77	6.22	0.25	0.15	41.73	5.90	246.40	0.54	0.19	79	0.655	0.355	0.69	0.90	0.45	Y	0.58	527.92	527.52	533.03	Curb Inlet	Open Channel
78A	78	7.21	0.25	0.20	1.21	3.29	3.97	0.17	0.06	41	0.437	0.073	0.33	0.43	0.22	Y	0.28	528.25	528.90	533.73	Curb Inlet	Open Channel
78B	78A	3.29	0.25	0.04	0.66	4.15	2.76	0.27	0.09	77	0.645	0.173	0.31	0.40	0.20	Y	0.21	529.21	529.20	533.89	Curb Inlet	Open Channel
78C	78B	4.15	0.30	0.08							0.000	0	0.08	0.10	0.05	Y	0.06	529.36	531.00	535.15	Curb Inlet	Open Channel
79	78	5.90	0.25	0.14	30.02	6.12	183.65	0.58	0.20	54	0.524	0.304	0.64	0.84	0.42	Y	0.67	528.59	528.10	534.31	Curb Inlet	Open Channel
79A	79	7.13	0.30	0.24							0.000	0	0.24	0.31	0.15	Y	0.36	531.97	532.30	534.20	Grate Inlet	Open Channel
80	79	6.12	0.25	0.15	28.93	5.89	170.46	0.54	0.19	83	0.672	0.362	0.70	0.91	0.45	Y	0.62	529.21	528.60	534.53	Curb Inlet	Pressure Flow
80A	80	1.37	0.30	0.01							0.000	0	0.01	0.01	0.01	Y	0.02	529.24	528.65	530.10	Grate Inlet	Pressure Flow
81	80	5.89	0.25	0.13	28.96	5.90	280.36	0.54	0.19	13	0.166	0.09	0.41	0.54	0.27	Y	0.52	530.92	531.30	535.81	Curb Inlet	Open Channel
82	81	9.68	0.50	0.73							0.000	0	0.73	0.95	0.47	Y	0.64	532.64	532.40	-	End Section	Open Channel
91	90	8.04	0.25	0.25	32.86	7.67	252.19	0.91	0.32	90	0.700	0.64	1.21	1.58	0.79	Y	1.25	517.65	517.20	521.74	Curb Inlet	Open Channel
91A	91	7.51	0.25	0.22	3.72	4.85	18.04	0.37	0.13	2	0.024	0.009	0.36	0.46	0.23	Y	0.45	518.95	519.00	521.74	Curb Inlet	Open Channel
91B	91A	4.85	0.30	0.11							0.000	0	0.11	0.14	0.07	Y	0.41	519.51	519.85	521.60	Grate Inlet	Open Channel
91C	91	3.26	0.30	0.05							0.000	0	0.05	0.06	0.03	Y	0.04	518.54	519.25	522.75	Curb Inlet	Open Channel
92	91	7.67	0.25	0.23	25.50	5.92	92.02	0.54	0.19	90	0.700	0.381	0.80	1.04	0.52	Y	0.71	518.36	517.76	522.66	Curb Inlet	Pressure Flow
92A	92	5.92	0.25	0.14	7.05	3.99	28.13	0.25	0.09	0	0.000	0	0.22	0.29	0.14	Y	0.21	518.58	518.48	524.13	Curb Inlet	Open Channel
92E	92A	2.09	0.30	0.02							0.000	0	0.02	0.03	0.01	Y	0.01	518.64	518.80	524.12	Curb Inlet	Open Channel
92B	92A	3.99	0.25	0.06	4.50	2.55	21.44	0.10	0.04	90	0.700	0.071	0.17	0.22	0.11	Y	0.57	519.15	519.18	527.00	Curb Inlet	Open Channel
92C	92B	4.76	0.25	0.09	2.78	4.15	11.56	0.27	0.09	11	0.142	0.038	0.22	0.29	0.14	Y	0.19	519.47	519.45	527.00	Curb Inlet	Open Channel
92D	92C	4.15	0.30	0.08							0.000	0	0.08	0.10	0.05	Y	0.19	519.69	519.95	521.70	Grate Inlet	Open Channel
92F	92B	5.85	0.25	0.13	1.68	5.85	9.81	0.53	0.19	31	0.358	0.19	0.51	0.66	0.00	N	0.71	523.96	524.90	529.46	Manhole	Open Channel
92G	92F	5.85	0.30	0.16							0.000	0	0.16	0.21	0.10	Y	0.14	525.14	526.25	529.94	Curb Inlet	Open Channel
93	92	3.61	0.25	0.05	23.44	4.78	167.87	0.35	0.12	10	0.130	0.046	0.22	0.29	0.14	Y	0.33	518.69	518.65	521.28	Curb Inlet	Open Channel
93A	93	3.37	0.30	0.05							0.000	0	0.05	0.07	0.03	Y	0.04	519.54	519.67	521.28	Curb Inlet	Open Channel
94	93	7.16	0.25	0.20	21.96	4.58	98.22	0.33	0.11	1	0.012	0.004	0.32	0.41	0.00	N	0.76	519.51	519.40	522.81	Manhole	Open Channel
94A	94	4.58	0.30	0.10							0.000	0	0.10	0.13	0.06	Y	0.07	521.01	521.13	522.67	Curb Inlet	Open Channel
95	94	4.47	0.25	0.08	17.37	3.54	61.44	0.19	0.07	1	0.012	0.002	0.15	0.19	0.10	Y	0.18	519.69	519.70	522.71	Curb Inlet	Open Channel
95A	95	1.79	0.25	0.01	1.75	1.42	6.45	0.03	0.01	54	0.524	0.016	0.04	0.05	0.03	Y	0.06	520.06	520.30	522.88	Curb Inlet	Open Channel
95B	95A	4.34	0.30	0.09							0.000	0	0.09	0.11	0.06	Y	0.07	520.55	522.64	524.42	Curb Inlet	Open Channel
95C	95A	3.69	0.25	0.05							0.000	0	0.05	0.07	0.03	Y	0.06	520.54	520.70	522.96	Curb Inlet	Open Channel
95D	95	3.52	0.25	0.05	0.68	2.66	1.82	0.11	0.04	0	0.000	0	0.09	0.11	0.06	Y	0.07	521.01	521.14	522.84	Curb Inlet	Open Channel
95E	95D	2.66	0.30	0.03							0.000	0	0.03	0.04	0.02	Y	0.03	521.27	521.85	523.99	Curb Inlet	Open Channel
96	95	3.54	0.25	0.05	14.22	2.90	41.20	0.13	0.05	0	0.000	0	0.09	0.12	0.06	Y	0.11	519.91	519.95	522.40	Grate Inlet	Open Channel
96A	96	2.90	0.25	0.03	14.26	4.28	217.68	0.28	0.10	45	0.465	0.132	0.26	0.34	0.00	N	0.42	520.47	520.50	526.51	Manhole	Open Channel
96AA	96A	15.27	0.25	0.90	13.43	11.36	152.56	2.00	0.70	68	0.600	1.202	2.81	3.65	1.83	Y	1.99	524.59	525.60	532.64	Curb Inlet	Open Channel
96B	96AA	11.36	0.25	0.50	11.48	7.69	88.32	0.92	0.32	9	0.116	0.107	0.93	1.21	0.00	N	1.48	529.08	530.10	536.29	Manhole	Open Channel
96G	96B	6.53	0.25	0.17	1.06	3.34	3.54	0.17	0.06	82	0.668	0.116	0.34	0.44	0.22	Y	0.32	531.12	532.80	537.82	Curb Inlet	Open Channel
96H	96G	3.34	0.30	0.05							0.000	0	0.05	0.07	0.03	Y	0.04	532.94	533.08	537.82	Curb Inlet	Open Channel
96C	96B	7.69	0.25	0.23	7.75	7.81	60.50	0.95	0.33	27	0.319	0.302	0.86	1.12	0.56	Y	0.89	531.09	531.74	534.77	Curb Inlet	Open Channel
96I	96C	6.85	0.30	0.22							0.000	0	0.22	0.28	0.14	Y	0.19	532.08	535.05	536.80	Grate Inlet	Open Channel
96D	96C	7.81	0.25	0.24	6.89	5.21	35.95	0.42	0.15	30	0.350	0.148	0.53	0.69	0.35	Y	1.05	532.89	533.90	537.73	Curb Inlet	Open Channel
96E	96D	5.21	0.25	0.11			31.80			90	0.700	0	0.11	0.14	0.07	Y	0.20	534.20	534.19	537.68	Curb Inlet	Open Channel
96F	96E	5.09	0.50	0.20							0.000	0	0.20	0.26	0.13	Y	0.69	534.98	535.25	-	End Section	Open Channel
98	97	6.12	0.25	0.15	35.44	7.22	255.89	0.81	0.28	3	0.036	0.029	0.46	0.60	0.30	Y	0.82	522.87	522.78	529.29	Curb Inlet	Open Channel
98A	98	4.81	0.25	0.09	3.28	4.64	15.21	0.33	0.12	61	0.565	0.189	0.40	0.52	0.26	Y	0.78	523.91	523.95	526.95	Curb Inlet	Open Channel
98B	98A	4.64	0.25	0.08	2.32	4.11	9.52	0.26	0.09	30	0.350	0.092	0.27	0.35	0.17	Y	0.26	524.31	524.30	526.64	Curb Inlet	Open Channel
98C	98B	4.11	0.30	0.08							0.000	0	0.08	0.10	0.05	Y	0.15	524.55	524.90	526.50	Grate Inlet	Open Channel
99	98	7.22	0.25	0.20	35.09	7.15	492.94	0.79	0.28	62	0.570	0.452	0.93	1.21	0.61	Y	0.83	523.71	523.80	529.32	Curb Inlet	Open Channel
100	99	14.05	0.30	0.92	34.63	11.11	384.82	1.92	0.67	24	0.289	0.554	2.14	2.79	1.39	Y	2.08	525.98	526.50	531.43	Curb Inlet	Open Channel
101	100	11.11	0.25	0.48	34.56	7.04	243.30	0.77	0.27	42	0.444	0.342	1.09	1.42	0.71	Y	1.51	528.11	528.30	533.60	Curb Inlet	Open Channel
102	101	7.04	0.25	0.19	33.47	6.82	228.25	0.72	0.25	42	0.444	0.321	0.77	1.00	0.50	Y	0.77	529.17	528.80	534.72	Curb Inlet	Open Channel
103	102	6.82	0.25	0.18	31.39	6.40	200.78	0.64	0.22	45	0.465	0.295	0.70	0.91	0.45	Y	0.65	529.82	529.20	534.72	Curb Inlet	Pressure Flow
104	103	6.40	0.25	0.16	29.09	5.93	172.37	0.55	0.19	45	0.465	0.254	0.60	0.78	0.39	Y	0.60	530.43	529.64	535.24	Curb Inlet	Pressure Flow
104A	104	1.91	0.30	0.02							0.000	0	0.02	0.02	0.01	Y	0.05	530.48	530.25	535.36	Curb Inlet	Pressure Flow
105	104	5.93	0.25	0.14	22.70	7.22	324.62	0.81	0.28	0	0.000	0	0.42	0.55	0.27	Y	0.68	531.10	532.60	538.05	Curb Inlet	Pressure Flow
105A	105	5.02	0.30	0.12							0.000	0	0.12	0.15	0.08	Y	0.42	533.32	533.49	535.29	Grate Inlet	Open Channel
106	105	14.30	0.25	0.79	21.40	6.81	145.84	0.72	0.25	90	0.700	0.505	1.55	2.02	1.01	Y	2.52	535.32	538.60	544.94	Curb Inlet	Open Channel
107	106	6.81	0.25	0.18	18.02	5.74	187.08	0.51	0.18	90	0.700	0.358	0.72	0.93	0.47	Y	0.73	539.43	539.50	544.94	Curb Inlet	Open Channel
107A	107	4.64	0.25	0.08	1.66	4.97	8.23	0.38	0.13	45	0.465	0.178	0.40	0.51	0.26	Y	0.36	540.96	540.85	543.38	Curb Inlet	Open Channel
107E	107A	0.00	0.30	0.00							0.000	0	0.00	0.00	0.00	Y	0.00	540.96	541.15	543.38	Curb Inlet	Open Channel
107B	107A	4.97	0.25	0.10	0.98	4.18	4.09	0.27	0.09	0	0.000	0	0.19	0.25	0.12	Y	0.19	541.15	542.60	546.37	Curb Inlet	Open Channel
107C	107B	4.18	0.25	0.07	0.36	2.46	0.89	0.09	0.03	90	0.700	0.066	0.17	0.22	0.11	Y	0.13	542.83	544.65	549.67	Curb Inlet	Open Channel
107D	107C	2.46	0.30	0.03							0.000	0	0.03	0.04	0.02	Y	0.02	544.77	545.00	549.67	Curb Inlet	Open Channel
108	107	10.38	0.25	0.42	14.34	14.81	212.35	3.41	1.19	0	0.000	0	1.61	2.09	1.05	Y	1.52	541.97	541.91	548.36	Curb Inlet	Open Channel
108A	108	4.33	0.30	0.09							0.000	0	0.09	0.11	0.06	Y	0.23	542.29	542.45	544.20	Grate Inlet	Open Channel
109	108	14.81	0.25	0.85	7.95	10.18	80.90	1.61	0.56	90	0.700	1.125	2.54	3.30	1.65	Y	3.52	545.53	547.87	552.76	Curb Inlet	Open Channel
109A	109	7.31	0.25	0.21	6.38	5.13	32.73	0.41	0.14	90	0.700	0.286	0.64	0.83	0.41	Y	0.65	548.72	548.95	553.98	Curb Inlet	Open Channel
109B	109A	5.13	0.25	0.10	3.75	5.24	19.63	0.43	0.15	90	0.700	0.298	0.55	0.71	0.36	Y	0.47	549.52	549.23	553.98	Curb Inlet	Open Channel
109C	109B	5.24	0.30	0.13							0.000	0	0.13	0.17	0.08	Y	0.26	550.46	550.68	553.51	Curb Inlet	Open Channel
110	109	10.18	0.25	0.40	7.33	6.78	49.65	0.71	0.25	0	0.000	0	0.65	0.85	0.42	Y	0.57	548.64	548.90	553.67	Curb Inlet	Open Channel
111	110	6.78	0.25	0.18	6.49	3.67	23.83	0.21	0.07	90	0.700	0.147	0.40	0.52	0.26	Y	0.77	549.77	550.20	555.48	Curb Inlet	Open Channel
112	111	3.67	0.25	0.05	5.81	3.29	45.68	0.17	0.06	90	0.700	0.118	0.23	0.30	0.15	Y	0.26	550.56	550.60	555.48	Curb Inlet	Open Channel
113	112	7.86	0.25	0.24	5.63	6.59	37.12	0.67	0.24	90	0.700	0.472	0.95	1.23	0.62	Y	0.90	551.60	552.60	557.59	Curb Inlet	Open Channel
114	113	6.59	0.50	0.34							0.000	0	0.34	0.44	0.22	Y	0.47	553.17	553.83	-	End Section	Open Channel

INTEGRITY FEDERAL SERVICES
CIVIL ENGINEERING • LANDSCAPE ARCHITECTURE • PLANNING
148 S. Queen Street, Suite 201 • Phone: 304-725-8456
Martinsburg, WV 25401 • www.ifs-ae.com

JASON P. GERHART REGISTERED No. 19127 STATE OF WEST VIRGINIA PROFESSIONAL ENGINEER 12-13-24

SEAL:

REVISIONS
1. 10/23/2024 - JEFFERSON COUNTY, WVDOH, CTUB, AND WVAW COMMENTS
2. 12/13/2024 - JEFFERSON COUNTY AND CTUB PUMP STATION COMMENTS

STORM SEWER COMPUTATIONS

BIRDHILL MEADOWS SUBDIVISION PHASE 1
TAX MAP 3, PARCEL 29; D.B. 1291, PG. 381
MIDDLEWAY TAX DISTRICT
JEFFERSON COUNTY, WEST VIRGINIA

J.C. FILE #24-12-SD

SCALE: HORIZ.: N/A VERT.: N/A
DATE: JULY 2024
JOB: 3568-0301
DRAWN: JMM CHECK: JPG
CADD: C-CU-761.DWG
NCS:
SHEET: 131 OF 147

FILE PATH: G:\PROJECT\GENERAL\3568-0301 MILLER PROPERTY PHASE 1\ENGIN\PLANS\C-CU-761.DWG

COPYRIGHT . NO REPRODUCTION OR USE OF THIS DRAWING IS ALLOWED IN PART OR IN WHOLE BY ANY PROCESS WITHOUT PRIOR WRITTEN AUTHORIZATION FROM INTEGRITY FEDERAL SERVICES (INTEGRITY).

STORM INLET COMPUTATIONS

INLET NO.			RUNOFF TO INLET								CURB / SUMP INLET COMPUTATIONS																	RUNOFF INTERCEPTED					
Inlet Structure No.	Inlet Type	Length (ft)	Drainage Area (ac)	C	CA	Sum CA	I (in/hr)	Q, increm (cfs)	Q, carryover (cfs)	Qt, gutter (cfs)	S, gutter (ft/ft)	Sx, cross slope (ft/ft)	T, spread (ft)	W (ft)	W/T	Sw (ft/ft)	Sw/Sx	Eo	a (in)	S'w = a/(12W)	Se (ft/f) = Sx + S'wEo	Lt (ft)	P, eff length (ft)	L/Lt	d (ft)	E	h (ft)	Q intercepted	d/h	Qb, carryover (cfs)	d, sump (ft)	T, spread at sag (ft)	REMARKS
2	TYPE E	6	0.21	0.61	0.13	--	4.00	0.51	0.00	0.51	0.0100	0.0313	5.52	1.33	0.24	0.0420	1.34	0.99	3.50	0.22	0.25	3.26	--	1.84	0.19	1.00	0.33	0.51	–	0.00	--	--	--
2A	TYPE E	6	0.16	0.78	0.12	--	4.00	0.50	0.00	0.50	0.0010	0.0313	8.25	1.33	0.16	0.0420	1.34	–	--	--	--	--	9.60	--	0.27	--	1.33	0.50	–	0.00	0.09	1.10	SUMP
3	TYPE E	6	0.29	0.76	0.22	--	4.00	0.88	0.00	0.88	0.0100	0.0313	6.76	1.33	0.20	0.0420	1.34	0.93	3.50	0.22	0.24	4.24	--	1.42	0.23	1.00	0.33	0.88	–	0.00	--	--	--
3A	TYPE E	6	0.15	0.78	0.12	--	4.00	0.47	0.00	0.47	0.0010	0.0313	8.08	1.33	0.16	0.0420	1.34	–	--	--	--	--	9.60	--	0.27	--	1.33	0.47	–	0.00	0.09	1.05	SUMP
4	TYPE E	6	0.30	0.70	0.21	--	4.00	0.84	0.00	0.84	0.0100	0.0313	6.64	1.33	0.20	0.0420	1.34	0.94	3.50	0.22	0.24	4.13	--	1.45	0.22	1.00	0.33	0.84	–	0.00	--	--	--
4A	TYPE E	6	0.20	0.62	0.12	--	4.00	0.50	0.00	0.50	0.0100	0.0313	5.45	1.33	0.24	0.0420	1.34	0.99	3.50	0.22	0.25	3.21	--	1.87	0.18	1.00	0.33	0.50	–	0.00	--	--	--
4B	TYPE B	4	0.09	0.74	0.07	--	4.00	0.27	0.00	0.27	0.0060	0.0313	4.70	1.33	0.28	0.0420	1.34	1.00	3.50	0.22	0.25	2.11	--	1.89	0.16	1.00	0.33	0.27	–	0.00	--	--	--
5	TYPE E	6	0.26	0.70	0.18	--	4.00	0.73	0.00	0.73	0.0280	0.0313	5.17	1.33	0.26	0.0420	1.34	1.00	3.50	0.22	0.25	5.12	--	1.17	0.18	1.00	0.33	0.73	–	0.00	--	--	--
5A	TYPE E	6	0.25	0.65	0.16	--	4.00	0.65	0.00	0.65	0.0280	0.0313	4.94	1.33	0.27	0.0420	1.34	1.00	3.50	0.22	0.25	4.88	--	1.23	0.17	1.00	0.33	0.65	–	0.00	--	--	--
6	TYPE E	6	0.29	0.72	0.21	--	4.00	0.84	0.00	0.84	0.0450	0.0313	4.97	1.33	0.27	0.0420	1.34	1.00	3.50	0.22	0.25	6.26	--	0.96	0.17	1.00	0.33	0.83	–	0.00	--	--	--
6A	TYPE E	6	0.26	0.74	0.19	--	4.00	0.77	0.00	0.77	0.0450	0.0313	4.81	1.33	0.28	0.0420	1.34	1.00	3.50	0.22	0.25	6.04	--	0.99	0.16	1.00	0.33	0.77	–	0.00	--	--	--
12	TYPE E	6	0.38	0.65	0.25	--	4.00	0.99	0.00	0.99	0.0010	0.0313	10.32	1.33	0.13	0.0420	1.34	–	--	--	--	--	9.60	--	0.34	--	0.33	0.99	–	0.00	0.14	1.73	SUMP
12A	TYPE E	6	1.17	0.50	0.59	--	4.00	2.34	0.00	2.34	0.0010	0.0313	13.64	1.33	0.10	0.0420	1.34	–	--	--	--	--	9.60	--	0.44	--	0.33	2.34	–	0.00	0.26	4.86	SUMP
13	TYPE E	6	0.10	0.67	0.07	--	4.00	0.27	0.00	0.27	0.0120	0.0313	4.09	1.33	0.33	0.0420	1.34	1.00	3.50	0.22	0.25	2.61	--	2.30	0.14	1.00	0.33	0.27	–	0.00	--	--	--
13A	TYPE E	6	0.15	0.62	0.09	--	4.00	0.37	0.00	0.37	0.0120	0.0313	4.68	1.33	0.28	0.0420	1.34	1.00	3.50	0.22	0.25	3.00	--	2.00	0.16	1.00	0.33	0.37	–	0.00	--	--	--
14	TYPE D	4	0.05	0.69	0.03	--	4.00	0.14	0.00	0.14	0.0050	0.0313	3.72	1.33	0.36	0.0420	1.34	1.00	3.50	0.22	0.25	1.52	--	2.63	0.13	1.00	0.33	0.14	–	0.00	--	--	--
15	TYPE D	4	0.05	0.64	0.03	--	4.00	0.13	0.00	0.13	0.0050	0.0313	3.60	1.33	0.37	0.0420	1.34	1.00	3.50	0.22	0.25	1.47	--	2.72	0.13	1.00	0.33	0.13	–	0.00	--	--	--
16	TYPE B	4	0.29	0.79	0.23	--	4.00	0.92	0.00	0.92	0.0100	0.0313	6.85	1.33	0.19	0.0420	1.34	–	--	--	--	--	7.60	--	0.23	--	0.33	0.92	–	0.00	0.18	2.41	SUMP
17	TYPE D	4	0.21	0.69	0.14	--	4.00	0.58	0.00	0.58	0.0100	0.0313	5.79	1.33	0.23	0.0420	1.34	0.98	3.50	0.22	0.25	3.45	--	1.16	0.20	1.00	0.33	0.58	–	0.00	--	--	--
21	TYPE E	6	0.18	0.69	0.12	--	4.00	0.50	0.00	0.50	0.0130	0.0313	5.18	1.33	0.26	0.0420	1.34	1.00	3.50	0.22	0.25	3.47	--	1.73	0.18	1.00	0.33	0.50	–	0.00	--	--	--
21A	TYPE E	6	0.19	0.69	0.13	--	4.00	0.52	0.00	0.52	0.0130	0.0313	5.29	1.33	0.25	0.0420	1.34	1.00	3.50	0.22	0.25	3.55	--	1.69	0.18	1.00	1.33	0.52	–	0.00	--	--	--
22	TYPE E	6	0.20	0.72	0.14	--	4.00	0.58	0.00	0.58	0.0010	0.0313	8.65	1.33	0.15	0.0420	1.34	–	--	--	--	--	9.60	--	0.29	--	0.33	0.58	–	0.00	0.10	1.21	SUMP
23	TYPE E	6	0.10	0.66	0.07	--	4.00	0.26	0.00	0.26	0.0010	0.0313	6.64	1.33	0.20	0.0420	1.34	–	--	--	--	--	9.60	--	0.22	--	0.33	0.26	–	0.00	0.06	0.72	SUMP
24	TYPE E	6	0.17	0.66	0.11	--	4.00	0.45	0.00	0.45	0.0080	0.0313	5.48	1.33	0.24	0.0420	1.34	0.99	3.50	0.22	0.25	2.88	--	2.08	0.19	1.00	0.33	0.45	–	0.00	--	--	--
31	TYPE E	6	0.16	0.64	0.10	--	4.00	0.41	0.00	0.41	0.0400	0.0313	3.79	1.33	0.35	0.0420	1.34	1.00	3.50	0.22	0.25	4.48	--	1.34	0.13	1.00	0.33	0.41	–	0.00	--	--	--
32	TYPE E	8	0.46	0.56	0.26	--	4.00	1.03	0.00	1.03	0.0400	0.0313	5.54	1.33	0.24	0.0420	1.34	0.99	3.50	0.22	0.25	6.62	--	1.21	0.19	1.00	0.33	1.03	–	0.00	--	--	--
33	TYPE D	4	0.08	0.80	0.06	--	4.00	0.26	0.00	0.26	0.0400	0.0313	3.11	1.33	0.43	0.0420	1.34	1.00	3.50	0.22	0.25	3.67	--	1.09	0.11	1.00	0.33	0.26	–	0.00	--	--	--
35	TYPE E	6	0.43	0.67	0.29	--	4.00	1.15	0.00	1.15	0.0010	0.0313	10.85	1.33	0.12	0.0420	1.34	–	--	--	--	--	9.60	--	0.35	--	0.33	1.15	–	0.00	0.16	1.92	SUMP
41	TYPE E	6	0.13	0.78	0.10	--	4.00	0.41	0.00	0.41	0.0290	0.0313	4.04	1.33	0.33	0.0420	1.34	1.00	3.50	0.22	0.25	4.05	--	1.48	0.14	1.00	1.33	0.41	–	0.00	--	--	--
42	TYPE E	6	0.28	0.61	0.17	--	4.00	0.68	0.00	0.68	0.0290	0.0313	5.01	1.33	0.27	0.0420	1.34	1.00	3.50	0.22	0.25	5.04	--	1.19	0.17	1.00	2.33	0.68	–	0.00	--	--	--
71A	TYPE D	4	0.32	0.63	0.20	--	4.00	0.81	0.00	0.81	0.0380	0.0313	5.07	1.33	0.26	0.0420	1.34	1.00	3.50	0.22	0.25	5.86	--	0.68	0.17	0.87	0.33	0.70	–	0.10	--	--	--
71B	TYPE E	6	0.29	0.70	0.20	--	4.00	0.81	0.00	0.81	0.0380	0.0313	5.09	1.33	0.26	0.0420	1.34	1.00	3.50	0.22	0.25	5.88	--	1.02	0.17	1.00	0.33	0.81	–	0.00	--	--	--
71AA	TYPE E	6	0.10	0.78	0.08	--	4.00	0.31	0.00	0.31	0.0120	0.0313	4.36	1.33	0.31	0.0420	1.34	1.00	3.50	0.22	0.25	2.78	--	2.16	0.15	1.00	1.33	0.31	–	0.00	--	--	--
71AB	TYPE D	4	0.25	0.67	0.17	--	4.00	0.67	0.00	0.67	0.0120	0.0313	5.91	1.33	0.22	0.0420	1.34	0.98	3.50	0.22	0.25	3.88	--	1.03	0.20	1.00	2.33	0.67	–	0.00	--	--	--
72	TYPE E	6	0.08	0.64	0.05	--	4.00	0.20	0.00	0.20	0.0010	0.0313	6.04	1.33	0.22	0.0420	1.34	–	--	--	--	--	9.60	--	0.20	--	0.33	0.20	–	0.00	0.05	0.61	SUMP
72A	TYPE E	6	0.18	0.67	0.12	--	4.00	0.48	0.00	0.48	0.0010	0.0313	8.16	1.33	0.16	0.0420	1.34	–	--	--	--	--	9.60	--	0.27	--	0.33	0.48	–	0.00	0.09	1.07	SUMP
72B	TYPE E	6	0.19	0.76	0.14	--	4.00	0.58	0.00	0.58	0.0510	0.0313	4.16	1.33	0.32	0.0420	1.34	–	--	--	--	--	9.60	--	0.14	--	0.33	0.58	–	0.00	0.10	1.21	SUMP
72C	TYPE E	6	0.26	0.69	0.18	--	4.00	0.72	0.00	0.72	0.0430	0.0313	4.71	1.33	0.28	0.0420	1.34	–	--	--	--	--	9.60	--	0.16	--	0.33	0.72	–	0.00	0.12	1.40	SUMP
72E	TYPE E	6	0.23	0.71	0.16	--	4.00	0.65	0.00	0.65	0.0230	0.0313	5.16	1.33	0.26	0.0420	1.34	1.00	3.50	0.22	0.25	4.61	--	1.30	0.18	1.00	0.33	0.65	–	0.00	--	--	--
72G	TYPE E	6	0.29	0.70	0.20	--	4.00	0.81	0.00	0.81	0.0010	0.0313	9.69	1.33	0.14	0.0420	1.34	–	--	--	--	--	9.60	--	0.32	--	0.33	0.81	–	0.00	0.13	1.52	SUMP
72I	TYPE E	6	0.25	0.68	0.17	--	4.00	0.68	0.00	0.68	0.0010	0.0313	9.14	1.33	0.15	0.0420	1.34	–	--	--	--	--	9.60	--	0.30	--	0.33	0.68	–	0.00	0.11	1.35	SUMP
72K	TYPE E	6	0.23	0.72	0.17	--	4.00	0.66	0.00	0.66	0.0230	0.0313	5.19	1.33	0.26	0.0420	1.34	1.00	3.50	0.22	0.25	4.64	--	1.29	0.18	1.00	0.33	0.66	–	0.00	--	--	--
72L	TYPE E	6	0.23	0.77	0.18	--	4.00	0.71	0.00	0.71	0.0230	0.0313	5.33	1.33	0.25	0.0420	1.34	1.00	3.50	0.22	0.25	4.78	--	1.26	0.18	1.00	0.33	0.71	–	0.00	--	--	--
72N	TYPE E	6	0.34	0.67	0.23	--	4.00	0.91	0.00	0.91	0.0260	0.0313	5.74	1.33	0.23	0.0420	1.34	0.99	3.50	0.22	0.25	5.54	--	1.08	0.19	1.00	0.33	0.91	–	0.00	--	--	--
73	TYPE E	6	0.05	0.81	0.04	--	4.00	0.16	0.00	0.16	0.0290	0.0313	2.73	1.33	0.49	0.0420	1.34	1.00	3.50	0.22	0.25	2.75	--	2.18	0.10	1.00	0.33	0.16	–	0.00	--	--	--
74	TYPE E	6	0.07	0.79	0.06	--	4.00	0.22	0.00	0.22	0.0310	0.0313	3.08	1.33	0.43	0.0420	1.34	1.00	3.50	0.22	0.25	3.20	--	1.87	0.11	1.00	0.33	0.22	–	0.00	--	--	--
74A	TYPE E	6	0.10	0.79	0.08	--	4.00	0.32	0.00	0.32	0.0280	0.0313	3.67	1.33	0.36	0.0420	1.34	1.00	3.50	0.22	0.25	3.61	--	1.66	0.13	1.00	1.33	0.32	–	0.00	--	--	--
74B	TYPE E	6	0.18	0.67	0.12	--	4.00	0.48	0.00	0.48	0.0280	0.0313	4.37	1.33	0.30	0.0420	1.34	1.00	3.50	0.22	0.25	4.31	--	1.39	0.15	1.00	2.33	0.48	–	0.00	--	--	--
76	TYPE E	6	0.27	0.69	0.19	--	4.00	0.75	0.00	0.75	0.0270	0.0313	5.26	1.33	0.25	0.0420	1.34	–	--	--	--	--	9.60	--	0.18	--	0.33	0.75	–	0.00	0.12	1.43	SUMP
77	TYPE E	6	0.11	0.68	0.07	--	4.00	0.30	0.00	0.30	0.0150	0.0313	4.08	1.33	0.33	0.0420	1.34	1.00	3.50	0.22	0.25	2.92	--	2.05	0.14	1.00	0.33	0.30	–	0.00	--	--	--
78	TYPE E	6	0.14	0.61	0.09	--	4.00	0.34	0.00	0.34	0.0150	0.0313	4.32	1.33	0.31	0.0420	1.34	1.00	3.50	0.22	0.25	3.09	--	1.94	0.15	1.00	0.33	0.34	–	0.00	--	--	--
78A	TYPE E	6	0.40	0.66	0.26	--	4.00	1.06	0.00	1.06	0.0150	0.0313	6.70	1.33	0.20	0.0420	1.34	0.93	3.50	0.22	0.24	5.15	--	1.17	0.22	1.00	0.33	1.06	–	0.00	--	--	--
78B	TYPE E	6	0.12	0.73	0.09	--	4.00	0.35	0.00	0.35	0.0150	0.0313	4.36	1.33	0.31	0.0420	1.34	1.00	3.50	0.22	0.25	3.12	--	1.92	0.15	1.00	1.33	0.35	–	0.00	--	--	--
78C	TYPE D	4	0.14	0.73	0.10	--	4.00	0.41	0.00	0.41	0.0150	0.0313	4.65	1.33	0.29	0.0420	1.34	1.00	3.50	0.22	0.25	3.33	--	1.20	0.16	1.00	2.33	0.41	–	0.00	--	--	--
79	TYPE E	6	0.04	0.78	0.03	--	4.00	0.12	0.00	0.12	0.0150	0.0313	2.82	1.33	0.47	0.0420	1.34	1.00	3.50	0.22	0.25	2.02	--	2.96	0.10	1.00	0.33	0.12	–	0.00	--	--	--
81	TYPE E	6	0.01	0.90	0.01	--	4.00	0.04	0.00	0.04	0.0360	0.0313	1.30	1.33	1.02	0.0420	1.34	1.00	3.50	0.22	0.25	1.56	--	3.84	0.05	1.00	0.33	0.04	–	0.00	--	--	--
91	TYPE E	6	0.30	0.65	0.20	--	4.00	0.78	0.00	0.78	0.0010	0.0313	9.56	1.33	0.14	0.0420	1.34	–	--	--	--	--	9.60	--	0.31	--	0.33	0.78	–	0.00	0.12	1.48	SUMP
91A	TYPE E	6	0.46	0.69	0.32	--	4.00	1.27	0.00	1.27	0.0010	0.0313	11.19	1.33	0.12	0.0420	1.34	–	--	--	--	--	9.60	--	0.36	--	0.33	1.27	–	0.00	0.17	2.11	SUMP
91C	TYPE E	6	0.19	0.65	0.12	--	4.00	0.49	0.00	0.49	0.0210	0.0313	4.69	1.33	0.28	0.0420	1.34	1.00	3.50	0.22	0.25	3.99	--	1.50	0.16	1.00	1.33	0.49	–	0.00	--	--	--
92	TYPE E	6	0.09	0.65	0.06	--	4.00	0.23	0.00	0.23	0.0200	0.0313	3.47	1.33	0.38	0.0420	1.34	1.00	3.50	0.22	0.25	2.87	--	2.09	0.12	1.00	0.33	0.23	–	0.00	--	--	--
92A	TYPE E	8	0.18	0.68	0.12	--	4.00	0.49	0.00	0.49	0.0240	0.0313	4.54	1.33	0.29	0.0420	1.34	1.00	3.50	0.22	0.25	4.14	--	1.93	0.16	1.00	0.33	0.49	–	0.00	--	--	--
92B	TYPE E	6	0.22	0.68	0.15	--	4.00	0.60	0.00	0.60	0.0240	0.0313	4.93	1.33	0.27	0.0420	1.34	1.00	3.50	0.22	0.25	4.50	--	1.33	0.17	1.00	0.33	0.60	–	0.00	--	--	--
92C	TYPE E	6	0.40	0.70	0.28	--	4.00	1.12	0.00	1.12	0.0240	0.0313	6.29	1.33	0.21	0.0420	1.34	0.96	3.50	0.22	0.24	5.99	--	1.00	0.21	1.00	1.33	1.12	–	0.00	--	--	--
92G	TYPE E	6	0.38	0.68	0.26	--	4.00	1.03	0.00	1.03	0.0240	0.0313	6.11	1.33	0.22	0.0420	1.34	0.97	3.50	0.22	0.24	5.76	--	1.04	0.21	1.00	0.33	1.03	–	0.00	--	--	--
93	TYPE E	6	0.28	0.61	0.17	--	4.00	0.68	0.00	0.68	0.0010	0.0313	9.16	1.33	0.15	0.0420	1.34	–	--	--	--	--	9.60	--	0.30	--	0.33	0.68	–	0.00	0.11	1.35	SUMP
93A	TYPE E	6	0.44	0.54	0.24	--	4.00	0.95	0.00	0.95	0.0010	0.0313	10.19	1.33	0.13	0.0420	1.34	–	--	--	--	--	9.60	--	0.33	--	0.33	0.95	–	0.00	0.14	1.69	SUMP
94A	TYPE E	6	0.39	0.68	0.27	--	4.00	1.06	0.00	1.06	0.0050	0.0313	8.11	1.33	0.16	0.0420	1.34	0.82	3.50	0.22	0.21	3.96	--	1.52	0.27	1.00	0.33	1.06	–	0.00	--	--	--
95	TYPE E	6	0.06	0.78	0.05	--	4.00	0.19	0.00	0.19	0.0010	0.0313	5.84	1.33	0.23	0.0420	1.34	–	--	--	--	--	9.60	--	0.20	--	0.33	0.19	–	0.00	0.05	0.57	SUMP
95A	TYPE E	6	0.16	0.68	0.11	--	4.00	0.44	0.00	0.44	0.0100	0.0313	5.18	1.33	0.26	0.0420	1.34	1.00	3.50	0.22	0.25	3.03	--	1.98	0.18	1.00	1.33	0.44	–	0.00	--	--	--
95B	TYPE E	6	0.18	0.68	0.12	--	4.00	0.49	0.00	0.49	0.0170	0.0313	4.88	1.33	0.27	0.0420	1.34	1.00	3.50	0.22	0.25	3.73	--	1.61	0.17	1.00	2.33	0.49	–	0.00	--	--	--
95C	TYPE E	6	0.39	0.69	0.27	--	4.00	1.08	0.00	1.08	0.0100	0.0313	7.25	1.33	0.18	0.0420	1.34	0.89	3.50	0.22	0.23	4.70	--	1.28	0.24	1.00	3.33	1.08	–	0.00	--	--	--
95D	TYPE E	6	0.18	0.73	0.13	--	4.00	0.53	0.00	0.53	0.0100	0.0313	5.58	1.33	0.24	0.0420	1.34	0.99	3.50	0.22	0.25	3.29	--	1.82	0.19	1.00	0.33	0.53	–	0.00	--	--	--
95E	TYPE E	6	0.21	0.50	0.11	--	4.00	0.42	0.00	0.42	0.0100	0.0313	5.10	1.33	0.26	0.0420	1.34	1.00	3.50	0.22	0.25	2.99	--	2.01	0.17	1.00	0.33	0.42	–	0.00	--	--	--
96AA	TYPE E	6	0.22	0.70	0.15	--	3.00	0.46	0.00	0.46	0.0470	0.0210	5.10	1.33	0.26	0.0420	2.00	–	--	--	--	--	9.60	--	0.13	--	-0.67	0.46	–	0.00	0.09	1.04	SUMP
96C	TYPE E	6	0.53	0.70	0.37	--	4.00	1.48	0.00	1.48	0.0100	0.0313	8.08	1.33	0.16	0.0420	1.34	–	--	--	--	--	9.60	--	0.27	--	0.33	1.48	–	0.00	0.19	2.71	SUMP
96D	TYPE E	6	0.20	0.72	0.14	--	4.00	0.58	0.00	0.58	0.0150	0.0313	5.34	1.33	0.25	0.0420	1.34	1.00	3.50	0.22	0.25	3.86	--	1.56	0.18	1.00	0.33	0.58	–	0.00	--	--	--
96E	TYPE E	6	0.20	0.69	0.14	--	4.00	0.55	0.00	0.55	0.0150	0.0313	5.25	1.33	0.25	0.0420	1.34	1.00	3.50	0.22	0.25	3.78	--	1.59	0.18	1.00	0.33	0.55	–	0.00	--	--	--
96G	TYPE E	6	0.24	0.80	0.19	--	4.00	0.77	0.00	0.77	0.0280	0.0313	5.29	1.33	0.25	0.0420	1.34	1.00	3.50	0.22	0.25	5.24	--	1.14	0.18	1.00	0.33	0.77	–	0.00	--	--	--
96H	TYPE E	6	0.24	0.68	0.16	--	4.00	0.65	0.00	0.65	0.0280	0.0313	4.95	1.33	0.27	0.0420	1.34	1.00	3.50	0.22	0.25	4.89	--	1.23	0.17	1.00	0.33	0.65	–	0.00	--	--	--
98	TYPE E	8	1.31	0.52	0.68	--	4.00	2.72	0.00	2.72	0.0170	0.0313	9.06	1.33	0.15	0.0420	1.34	0.75	3.50	0.22	0.20	8.91	--	0.90	0.30	0.98	0.33	2.68	–	0.04	--	--	--
98A	TYPE E	6	0.24	0.66	0.16	--	4.00	0.63	0.04	0.67	0.0170	0.0313	5.54	1.33	0.24	0.0420	1.34	0.99	3.50	0.22	0.25	4.28	--	1.40	0.19	1.00	0.33	0.67	–	0.00	--	--	--
98B	TYPE E	6	0.24	0.66	0.16	--	4.00	0.63	0.00	0.63	0.0170	0.0313	5.41	1.33	0.25	0.0420	1.34	1.00	3.50	0.22	0.25	4.17	--	1.44	0.18	1.00	0.33	0.63	–	0.00	--	--	--
99	TYPE E	6	0.15	0.65	0.10	--	4.00	0.39	0.00	0.39	0.0170	0.0313	4.44	1.33	0.30	0.0420	1.34	1.00	3.50	0.22	0.25	3.39	--	1.77	0.15	1.00	0.33	0.39	–	0.00	--	--	--
100	TYPE E	6	0.18	0.75	0.14	--	4.00	0.54	0.00	0.54	0.0170	0.0313	5.07	1.33	0.26	0.0420	1.34	1.00	3.50	0.22	0.25	3.89	--	1.54	0.17	1.00	0.33	0.54	–	0.00	--	--	--
101	TYPE E	6	0.08	0.43	0.03	--	4.00	0.14	0.00	0.14	0.0170	0.0313	2.86	1.33	0.46	0.0420	1.34	1.00	3.50	0.22	0.25	2.19	--	2.74	0.10	1.00	0.33	0.14	–	0.00	--	--	--
102	TYPE E	6	0.29	0.69	0.20	--	4.00	0.80	0.00	0.80	0.0240	0.0313	5.54	1.33	0.24	0.0420	1.34	0.99	3.50	0.22	0.25	5.11	--	1.17	0.19	1.00	0.33	0.80	–	0.00	--	--	--
103	TYPE E	6	0.56	0.66	0.37	--	4.00	1.48	0.00	1.48	0.0240	0.0313	6.95	1.33	0.19	0.0420	1.34	–	--	--	--	--	9.60	--	0.23	--	1.33	1.48	–	0.00	0.19	2.70	SUMP
104	TYPE E	6	0.10	0.50	0.05	--	4.00	0.20	0.00	0.20	0.0170	0.0313	3.36	1.33	0.40	0.0420	1.34	1.00	3.50	0.22	0.25	2.56	--	2.34	0.12	1.00	0.33	0.20	–	0.00	--	--	--
104A	TYPE E	6	0.67	0.54	0.36	--	4.00	1.45	0.00	1.45	0.0170	0.0313	7.33	1.33	0.18	0.0420	1.34	0.89	3.50	0.22	0.23	6.27	--	0.96	0.24	1.00	0.33	1.44	–	0.00	--	--	--

STORM INLET COMPUTATIONS

INLET NO.			RUNOFF TO INLET								CURB / SUMP INLET COMPUTATIONS																	RUNOFF INTERCEPTED					
Inlet Structure No.	Inlet Type	Length (ft)	Drainage Area (ac)	C	CA	Sum CA	I (in/hr)	Q, increm (cfs)	Q, carryover (cfs)	Qt, gutter (cfs)	S, gutter (ft/ft)	Sx, cross slope (ft/ft)	T, spread (ft)	W (ft)	W/T	Sw (ft/ft)	Sw/Sx	Eo	a (in)	S'w = a/(12W)	Se (ft/f) = Sx + S'wEo	Lt (ft)	P, eff length (ft)	L/Lt	d (ft)	E	h (ft)	Q intercepted	d/h	Qb, carryover (cfs)	d, sump (ft)	T, spread at sag (ft)	REMARKS
105	TYPE E	6	0.26	0.62	0.16	–	4.00	0.64	0.00	0.64	0.0390	0.0313	4.60	1.33	0.29	0.0420	1.34	1.00	3.50	0.22	0.25	5.38	--	1.12	0.16	1.00	0.33	0.64	--	0.00	–	--	--
106	TYPE E	6	0.34	0.65	0.22	–	4.00	0.88	0.00	0.88	0.0390	0.0313	5.24	1.33	0.25	0.0420	1.34	1.00	3.50	0.22	0.25	6.14	--	0.98	0.18	1.00	0.33	0.88	--	0.00	–	--	--
107	TYPE E	6	0.05	0.78	0.04	–	4.00	0.16	0.00	0.16	0.0390	0.0313	2.52	1.33	0.53	0.0420	1.34	1.00	3.50	0.22	0.25	2.96	--	2.03	0.09	1.00	0.33	0.16	--	0.00	–	--	--
107A	TYPE E	6	0.27	0.66	0.18	–	4.00	0.71	0.00	0.71	0.0240	0.0313	5.29	1.33	0.25	0.0420	1.34	--	–	--	--	–	9.60	--	0.18	--	0.33	0.71	--	0.00	0.12	1.39	SUMP
107B	TYPE E	6	0.20	0.57	0.11	–	4.00	0.46	0.00	0.46	0.0240	0.0313	4.41	1.33	0.30	0.0420	1.34	1.00	3.50	0.22	0.25	4.02	--	1.49	0.15	1.00	0.33	0.46	--	0.00	–	--	--
107C	TYPE E	6	0.17	0.57	0.10	–	4.00	0.39	0.00	0.39	0.0240	0.0313	4.12	1.33	0.32	0.0420	1.34	1.00	3.50	0.22	0.25	3.75	--	1.60	0.14	1.00	0.33	0.39	--	0.00	–	--	--
107D	TYPE E	6	0.08	0.70	0.06	–	4.00	0.22	0.00	0.22	0.0240	0.0313	3.28	1.33	0.41	0.0420	1.34	1.00	3.50	0.22	0.25	2.98	--	2.01	0.12	1.00	0.33	0.22	--	0.00	–	--	--
107E	TYPE E	6	0.15	0.79	0.12	–	4.00	0.47	0.00	0.47	0.0240	0.0313	4.48	1.33	0.30	0.0420	1.34	1.00	3.50	0.22	0.25	4.08	--	1.47	0.15	1.00	1.33	0.47	--	0.00	–	--	--
108	TYPE E	6	0.11	0.70	0.08	–	4.00	0.31	0.00	0.31	0.0390	0.0313	3.38	1.33	0.39	0.0420	1.34	1.00	3.50	0.22	0.25	3.94	--	1.52	0.12	1.00	0.33	0.31	--	0.00	–	--	--
109A	TYPE E	6	0.06	0.70	0.04	–	4.00	0.17	0.00	0.17	0.0140	0.0313	3.24	1.33	0.41	0.0420	1.34	1.00	3.50	0.22	0.25	2.25	--	2.67	0.12	1.00	0.33	0.17	--	0.00	–	--	--
109B	TYPE E	8	0.91	0.46	0.42	–	4.00	1.67	0.00	1.67	0.0140	0.0313	7.96	1.33	0.17	0.0420	1.34	0.84	3.50	0.22	0.21	6.48	--	1.24	0.26	1.00	0.33	1.67	--	0.00	–	--	--
109C	TYPE E	8	1.65	0.35	0.58	–	4.00	2.31	0.00	2.31	0.0010	0.0313	13.58	1.33	0.10	0.0420	1.34	--	–	--	--	–	11.60	--	0.44	--	0.33	2.31	--	0.00	0.21	3.37	SUMP
110	TYPE E	6	0.17	0.69	0.12	–	4.00	0.47	0.00	0.47	0.0190	0.0313	4.68	1.33	0.28	0.0420	1.34	1.00	3.50	0.22	0.25	3.79	--	1.58	0.16	1.00	0.33	0.47	--	0.00	–	--	--
111	TYPE E	6	0.21	0.66	0.14	–	4.00	0.55	0.00	0.55	0.0190	0.0313	5.01	1.33	0.27	0.0420	1.34	1.00	3.50	0.22	0.25	4.07	--	1.48	0.17	1.00	0.33	0.55	--	0.00	–	--	--
112	TYPE E	6	0.17	0.70	0.12	–	4.00	0.48	0.00	0.48	0.0190	0.0313	4.71	1.33	0.28	0.0420	1.34	1.00	3.50	0.22	0.25	3.81	--	1.57	0.16	1.00	0.33	0.48	--	0.00	–	--	--
113	TYPE E	6	0.06	0.70	0.04	–	4.00	0.17	0.00	0.17	0.0190	0.0313	3.04	1.33	0.44	0.0420	1.34	1.00	3.50	0.22	0.25	2.46	--	2.44	0.11	1.00	0.33	0.17	--	0.00	–	--	--

GRATE INLET DESIGN COMPUTATIONS

INLET NO.	TYPE	AREA (Ac)	"C"	"I" (in/hr)	GRATE DESIGN				REMARKS
					FLOW (cfs)	AREA$_{50}$ (sf)	PERIM$_{50}$ (ft)	DEPTH (ft)	
7	TYPE G	0.03	0.63	6.49	0.12	3.00	9.42	0.03	SUMP
13B	TYPE G	1.53	0.41	6.49	4.07	3.00	9.42	0.27	SUMP
71C	TYPE G	0.66	0.44	6.49	1.88	3.00	9.42	0.16	SUMP
72H	TYPE G	0.55	0.32	6.49	1.14	3.00	9.42	0.12	SUMP
72M	TYPE G	0.43	0.45	6.49	1.26	3.00	9.42	0.13	SUMP
75	TYPE G	0.86	0.40	6.49	2.23	3.00	9.42	0.18	SUMP
79A	TYPE G	3.93	0.65	6.49	16.58	3.00	9.42	1.32	SUMP
80A	TYPE G	0.81	0.32	6.49	1.68	3.00	9.42	0.15	SUMP
91B	TYPE G	0.83	0.69	6.49	3.72	3.00	9.42	0.26	SUMP
92D	TYPE G	1.10	0.39	6.49	2.78	3.00	9.42	0.21	SUMP
96	TYPE G	1.20	0.44	6.49	3.43	3.00	9.42	0.24	SUMP
96I	TYPE G	0.67	0.39	6.49	1.70	3.00	9.42	0.15	SUMP
98C	TYPE G	0.94	0.38	6.49	2.32	3.00	9.42	0.19	SUMP
105A	TYPE G	2.69	0.35	6.49	6.11	3.00	9.42	0.36	SUMP
108A	TYPE G	1.29	0.40	6.49	3.35	3.00	9.42	0.24	SUMP

NOTE:
1. GRATES SHALL BE BICYCLE SAFE GRATES.

GRASS SWALE SECTION:
NOT TO SCALE

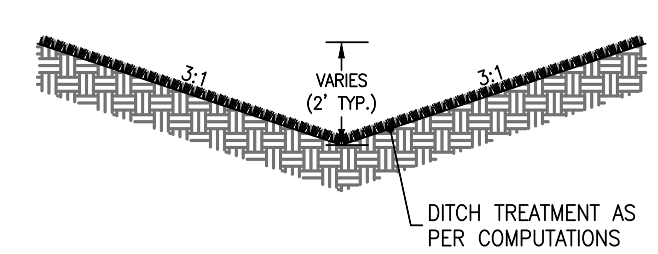

DITCH COMPUTATIONS (JEFFERSON COUNTY, WV) — DESIGN STORM: 10 YR

	DITCH DATA					RAINFALL (IN./HR.)	FLOW RATE (Q) (CUM.) (CFS)	VELOCITY (FPS)	DEPTH (FT.)	DITCH TREATMENT*
SECTION	MANNINGS "N" FACTOR	CHANNEL SLOPE	LEFT SIDE SLOPE	RIGHT SIDE SLOPE	BOTTOM WIDTH					
1-1'	0.030	1.00	3.00	3.00	0.00	6.40	46.78	4.54	1.85	SOLID SODDING
2-2'	0.030	1.00	3.00	3.00	0.00	6.40	48.69	4.59	1.88	SOLID SODDING
3-3'	0.030	1.00	3.00	3.00	0.00	6.40	8.40	2.95	0.97	MESH DITCH LINER
4-4'	0.030	0.50	3.00	3.00	2.00	6.40	9.57	2.32	0.88	MESH DITCH LINER

* DITCH TREATMENT SELECTIONS PER JEFFERSON COUNTY STORMWATER MANAGEMENT ORDINANCE TABLE 3.

FILE PATH: G:\PROJECT\GENERAL\3568-0301 MILLER PROPERTY PHASE 1\ENGIN\PLANS\C-CU-761.DWG
COPYRIGHT . NO REPRODUCTION OR USE OF THIS DRAWING IS ALLOWED IN PART OR IN WHOLE BY ANY PROCESS WITHOUT PRIOR WRITTEN AUTHORIZATION FROM INTEGRITY FEDERAL SERVICES (INTEGRITY).

INTEGRITY FEDERAL SERVICES
CIVIL ENGINEERING • LANDSCAPE ARCHITECTURE • PLANNING
148 S. Queen Street, Suite 201 • Phone: 304-725-8456
Martinsburg, WV 25401 • www.ifs-ae.com

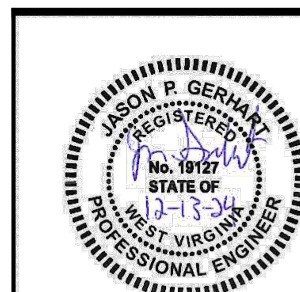

SEAL:

REVISIONS
1. 10/23/2024 - JEFFERSON COUNTY, WVDOH, CTUB, AND WVAW COMMENTS
2. 12/13/2024 - JEFFERSON COUNTY AND CTUB PUMP STATION COMMENTS

STORM SEWER COMPUTATIONS

BIRDHILL MEADOWS SUBDIVISION PHASE 1
TAX MAP 3, PARCEL 29; D.B. 1291, PG. 381
MIDDLEWAY TAX DISTRICT
JEFFERSON COUNTY, WEST VIRGINIA

J.C. FILE #24-12-SD

SCALE: HORIZ.: N/A VERT.: N/A
DATE: JULY 2024
JOB: 3568-0301
DRAWN: JMM CHECK: JPG
CADD: C-CU-761.DWG
NCS:
SHEET:

STORMWATER MANAGEMENT NARRATIVE:

1. ALL STORMWATER MANAGEMENT POND CONSTRUCTION SHALL BE IN STRICT COMPLIANCE WITH ALL APPLICABLE JEFFERSON COUNTY REQUIREMENTS, THE U.S. DEPARTMENT OF AGRICULTURE SOIL CONSERVATION SERVICE STANDARDS AND SPECIFICATIONS, AND AS PUBLISHED IN THE "WEST VIRGINIA STORMWATER MANAGEMENT AND DESIGN GUIDANCE MANUAL"

2. EMBANKMENT:

(A) DESIGN AND CONSTRUCTION OF THE PROPOSED DAM IS SUBJECT TO RECOMMENDATIONS AND INSPECTION BY A QUALIFIED GEOTECHNICAL ENGINEER.

(B) AREAS UNDER THE EMBANKMENT AND ANY STRUCTURAL WORKS SHALL BE CLEARED, GRUBBED, AND STRIPPED OF TOPSOIL, ROOTS OR OTHER OBJECTIONABLE MATERIAL.

(C) THE SUITABILITY AND ACCEPTABILITY OF ALL FILL MATERIAL WILL BE DETERMINED BY REGULAR PERIODIC SOIL ANALYSIS AND COMPACTION TESTS, WHICH SHALL BE MADE BY A QUALIFIED GEOTECHNICAL ENGINEER.

(D) TESTS FOR SOIL ANALYSIS, MOISTURE CONTENT, AND COMPACTION ARE TO BE CONDUCTED IN ACCORDANCE WITH THE LATEST APPLICABLE ASTM STANDARDS AND SPECIFICATIONS.

(E) MATERIALS USED FOR THE IMPERVIOUS CORE AND CUT-OFF TRENCH, IF REQUIRED BY THE GEOTECHNICAL ENGINEER, SHALL BE COMPRISED OF ONE OF THE FOLLOWING SOILS AS DESIGNATED BY THE UNIFIED SOIL SYSTEM: SC, CL, OR ML HAVING A MINIMUM PLASTICITY INDEX OF 8 WITH A MINIMUM OF 45% PASSING THE NO. 200 SIEVE AND A MAX. OF 5% RETAINED ON THE NO. 4 SIEVE. THE CUT-OFF TRENCH (IF REQUIRED) SHALL EXTEND A MINIMUM OF 4 FEET BELOW SUBGRADE OR TO REFUSAL.

(F) THE CUT-OFF TRENCH SHALL BE EXCAVATED INTO IMPERVIOUS MATERIAL ALONG OR PARALLEL TO THE CENTERLINE OF THE EMBANKMENT AS SHOWN ON THE PLANS. THE BOTTOM WIDTH OF THE TRENCH SHALL BE A MINIMUM WIDTH OF 4 FEET. THE DEPTH SHALL BE AT LEAST 4 FEET BELOW EXISTING GRADE OR AS SHOWN ON THE PLANS. THE SIDE SLOPES OF THE TRENCH SHALL BE 1 TO 1 OR FLATTER. THE BACKFILL SHALL BE COMPACTED WITH CONSTRUCTION EQUIPMENT, ROLLERS, OR HAND TAMPERS TO ASSURE MAXIMUM DENSITY AND MINIMUM PERMEABILITY.

(G) THE EMBANKMENT MAY BE CONSTRUCTED AS A HOMOGENOUS EMBANKMENT DAM USING ACCEPTABLE MATERIAL CLASSIFIED ML, CL, SC, OR GC SOILS PER ASTM D-2487. IN TO THESE MATERIALS, SOILS CLASSIFIED CH AND MH MAY BE USED AS COMPACTED ADDITION EMBANKMENT FILL BELOW THE UPPER 5 FEET OF THE SLOPES. SOILS CLASSIFIED AS SM OR GM PER ASTM D-2487 OR SUITABLE FILL MAY BE USED FOR EMBANKMENT IN THE DOWNSTREAM HALF OF THE EMBANKMENT SUBJECT TO APPROVAL BY A QUALIFIED GEOTECHNICAL ENGINEER.

(H) COMPACTION SHALL BE NOT LESS THAN 98% OF THE MAXIMUM DRY DENSITY FOR THE GIVEN EMBANKMENT MATERIAL AS DETERMINED BY USE OF THE STANDARD PROCTOR METHOD PER ASTM T-99 OR ASTM D-698.

(I) EMBANKMENT FILL SHALL BE CONSTRUCTED IN 8-INCH LOOSE LIFTS AND SHALL BE CONTINUOUS OVER THE ENTIRE LENGTH OF THE FILL SO THAT SMOOTH HORIZONTAL PLANES ARE NOT BUILT INTO THE FILL STRUCTURE. SCARIFYING OR USE OF SHEEPS-FOOT ROLLERS CAN BE USED TO AVOID SMOOTH HORIZONTAL PLANES.

(J) THE EMBANKMENT SHALL BE CONSTRUCTED TO A MINIMUM ELEVATION 5% HIGHER THAN THE DESIGNED HEIGHT TO ALLOW FOR SETTLEMENT WHEN MECHANICAL COMPACTORS ARE USED FOR CONSTRUCTION.

(K) THE CONTRACTOR IS RESPONSIBLE FOR ACQUIRING ACCEPTABLE BORROW MATERIAL EITHER FROM ON-SITE OR OFF-SITE SOURCES AS REQUIRED. ALL OFF-SITE WASTE OR BORROW SOURCES SHALL BE INCLUDED IN THE NPDES PERMIT.

(L) THE CONTRACTOR SHALL MAINTAIN ALL MATERIAL TICKETS, SOIL TEST RESULTS AND PHOTOGRAPHIC RECORDS OF COVERED EMBANKMENT CONSTRUCTION ELEMENTS (CUT-OFF TRENCH, ANTI-SEEP MEASURES, PIPE INSTALLATION) FOR INCLUSION INTO AS-BUILT POND RECORDS.

(M) EMBANKMENT CONSTRUCTION SHALL BE CERTIFIED BY AN ENGINEER AS MEETING THE ABOVE REQUIREMENTS

3. OUTLET CONTROL STRUCTURE NOTES:

(A) THE PURPOSE OF THIS PLAN IS TO PROVIDE THE BASIC DIMENSIONS REQUIRED TO CONTROL THE CONSTRUCTION OF THE COMBINATION PRINCIPAL/EMERGENCY SPILLWAY. THE BASIC DIMENSIONS OF ALL DRAINAGE STRUCTURES AND ORIFICES SHOWN FOR EACH CONTROL STRUCTURE SHALL BE MAINTAINED.

(B) ALL RISER, WEIR WALL, SPILLWAY, AND FOOTING DIMENSIONS AND/OR THICKNESS, AS WELL AS REINFORCEMENT, BUOYANCY CALCULATIONS AND THE METHOD OF JOINING THE VARIOUS STRUCTURAL ELEMENTS SHALL BE VERIFIED BY A PROFESSIONAL STRUCTURAL ENGINEER AND SUBMITTED TO THE ENGINEER OF RECORD FOR ACCEPTANCE PRIOR TO FABRICATION.

(C) SUBGRADE PREPARATION AND BEDDING REQUIREMENTS FOR ALL STRUCTURAL ELEMENTS ARE SUBJECT TO DESIGN BY A PROFESSIONAL GEOTECHNICAL ENGINEER.

(D) PRECAST CONCRETE IS TO ATTAIN A MINIMUM COMPRESSIVE STRENGTH OF 4,000 PSI. CAST-IN-PLACE CONCRETE SHALL BE WVDOH CLASS B. ALL CONCRETE SHALL MEET THE REQUIREMENTS OF THE WEST VIRGINIA DEPARTMENT OF TRANSPORTATION STANDARD SPECIFICATIONS FOR CONSTRUCTION AND MATERIALS.

(E) ALL EXPOSED EDGES SHALL BE CHAMFERED 3/4".

(F) SHOP DRAWINGS ARE TO BE SUBMITTED TO AND APPROVED BY THE ENGINEER OF RECORD PRIOR TO FABRICATION.

(G) BACKFILL ADJACENT TO THE OUTLET STRUCTURES SHALL BE OF THE TYPE AND QUALITY CONFORMING TO THAT SPECIFIED FOR THE ADJOINING FILL MATERIAL. THE FILL SHALL BE PLACED IN HORIZONTAL LAYERS NOT TO EXCEED FOUR INCHES IN THICKNESS AND COMPACTED BY HAND TAMPERS OR OTHER MANUALLY DIRECTED COMPACTION EQUIPMENT. THE MATERIAL NEEDS TO FILL COMPLETELY ALL SPACES UNDER AND ADJACENT TO THE PIPE. AT NO TIME DURING THE BACKFILLING OPERATION SHALL DRIVEN EQUIPMENT BE ALLOWED TO OPERATE CLOSER THAN FOUR FEET, MEASURED HORIZONTALLY, TO ANY PART OF A STRUCTURE. UNDER NO CIRCUMSTANCES SHALL EQUIPMENT BE DRIVEN OVER ANY PART OF A CONCRETE STRUCTURE.

(H) ROCK RIP-RAP SHALL MEET THE REQUIREMENTS OF THE WEST VIRGINIA DEPARTMENT OF TRANSPORTATION STANDARD SPECIFICATIONS FOR CONSTRUCTION AND MATERIALS. THE RIP-RAP SHALL BE PLACED TO THE REQUIRED THICKNESS IN ONE OPERATION. THE ROCK SHALL BE DELIVERED AND PLACED IN A MANNER THAT WILL ENSURE THE RIP-RAP IS REASONABLY HOMOGENOUS WITH LARGER ROCKS UNIFORMLY DISTRIBUTED AND FIRMLY IN CONTACT WITH SMALLER ROCKS FILLING THE VOIDS BETWEEN THE LARGER ROCKS. FILTER CLOTH SHALL BE PLACED UNDER ALL RIP-RAP AND SHALL MEET THE REQUIREMENTS OF THE WEST VIRGINIA DEPARTMENT OF TRANSPORTATION STANDARD SPECIFICATIONS FOR CONSTRUCTION AND MATERIALS.

4. MAINTENANCE REQUIREMENTS:

(A) OWNERSHIP, MAINTENANCE, INSPECTIONS, AND CLEANING OF STORMWATER MANAGEMENT FACILITIES SHALL BE THE RESPONSIBILITY OF THE HOMEOWNERS ASSOCIATION OR LOT OWNERS ASSOCIATION AND/OR PROPERTY OWNER OR OTHER RESPONSIBLE ENTITY. ALL STORMWATER MANAGEMENT FACILITIES SHALL BE CONVEYED BY DEED TO THE RESPONSIBLE PARTY AT THE SAME TIME TRANSFER OF ALL OTHER COMMON AREAS IS REQUIRED UNDER THE SUBDIVISION AND LAND DEVELOPMENT REGULATIONS.

(B) THE HOMEOWNERS ASSOCIATION OR LOT OWNERS ASSOCIATION AND/OR PROPERTY OWNER OR OTHER ENTITY RESPONSIBLE FOR THE MAINTENANCE OF THE STORMWATER MANAGEMENT FACILITIES CONSTRUCTED PURSUANT TO THE JEFFERSON COUNTY STORMWATER MANAGEMENT ORDINANCE SHALL MAINTAIN IN GOOD CONDITION AND PROMPTLY REPAIR AND RESTORE ALL GRADE SURFACES, WALLS, DRAINS, DAMS AND STRUCTURES, DISCHARGE STRUCTURES, TRASH RACKS, VEGETATION, EROSION AND SEDIMENT CONTROL MEASURES, AND OTHER PROTECTIVE DEVICES. SUCH REPAIRS OR RESTORATION AND MAINTENANCE SHALL BE IN ACCORDANCE WITH THE APPROVED PLANS AND SPECIFICATIONS.

(C) THE PARTY RESPONSIBLE FOR THE MAINTENANCE OF THE STORMWATER MANAGEMENT SYSTEM SHALL MAINTAIN AND PROVIDE WRITTEN RECORDS OF ALL MAINTENANCE AND REPAIRS WITHIN 30 DAYS OF WORK COMPLETION TO THE WVDEP. A COPY OF THESE RECORDS SHALL BE SUBMITTED TO THE JEFFERSON COUNTY ENGINEERING DEPARTMENT AS NOTIFICATION THAT MAINTENANCE WORK WAS PERFORMED.

(D) A PERIODIC MAINTENANCE SCHEDULE SHALL BE DEVELOPED FOR THE LIFE OF ANY STORMWATER MANAGEMENT FACILITY. ALL MAINTENANCE AND REPAIR, PERIODIC INSPECTIONS, AND CLEANING OF STORMWATER MANAGEMENT FACILITIES SHALL BE THE RESPONSIBILITY OF THE HOMEOWNERS ASSOCIATION OR LOT OWNERS ASSOCIATION AND/OR PROPERTY OWNER OR OTHER RESPONSIBLE ENTITY, AND SHALL BE PERFORMED IN ACCORDANCE WITH THE JEFFERSON COUNTY STORMWATER MANAGEMENT ORDINANCE UNDER WHICH THE PROJECT WAS APPROVED.

(E) INSPECTION OF THE PRIMARY SPILLWAY ORIFICE MAY REQUIRE GREATER FREQUENCY DEPENDING UPON THE AMOUNT OF DEBRIS WHICH ACCUMULATES WITHIN THE STORMWATER MANAGEMENT FACILITY. ANY TRASH AND/OR DEBRIS WITHIN THE STORMWATER MANAGEMENT FACILITY SHALL BE REMOVED AND PROPERLY DISPOSED OF.

(F) THE HOMEOWNERS ASSOCIATION OR LOT OWNERS ASSOCIATION AND/OR PROPERTY OWNER OR OTHER RESPONSIBLE ENTITY SHALL BE RESPONSIBLE FOR ENGAGING A MANAGEMENT FIRM TRAINED IN PROPER MAINTENANCE AND INSPECTION OF STORMWATER MANAGEMENT FACILITIES. IT SHALL BE THE RESPONSIBILITY OF SAID FIRM TO MAINTAIN ALL REQUIRED RECORDS AND REPORT THESE FINDINGS TO THE WVDEP TO ENSURE PROTECTION OF THE GROUND WATER. THE PARAMETERS AND THE FREQUENCY OF THIS MONITORING SHALL BE DETERMINED BY WVDEP.

CUT-OFF TRENCH & IMPERVIOUS CORE NOTES:

1. A CUT-OFF TRENCH OF RELATIVELY IMPERVIOUS MATERIAL SHALL BE PROVIDED UNDER THE ENTIRE LENGTH OF THE EMBANKMENT AND SHALL BE LOCATED AT OR UPSTREAM FROM THE CENTERLINE OF THE EMBANKMENT. THE CUT-OFF TRENCH SHALL HAVE A BOTTOM WIDTH ADEQUATE TO ACCOMMODATE THE EQUIPMENT USED FOR EXCAVATION, BACKFILL, AND COMPACTION OPERATIONS, WITH A MINIMUM WIDTH BEING 4 FEET, AND SHALL HAVE SIDE SLOPES NO STEEPER THAN ONE HORIZONTAL TO ONE VERTICAL. THE CUT-OFF TRENCH SHALL HAVE A MINIMUM DEPTH OF 4 FEET.
2. ANY IMPERVIOUS CORE WITHIN THE EMBANKMENT SHALL BE LOCATED AT OR UPSTREAM FROM THE CENTERLINE OF THE EMBANKMENT, AND SHALL EXTEND UP FROM THE ABUTMENTS TO THE 10-YEAR WATER SURFACE ELEVATION. THE IMPERVIOUS CORE SHALL EXTEND VERTICALLY FROM THE CUT-OFF TRENCH UP TO THE 10-YEAR WATER SURFACE ELEVATION THROUGHOUT THE EMBANKMENT.

POND LINER NOTES:

1. THE POND AND SEDIMENT FOREBAY SHALL BE LINED IN ONE OF THE FOLLOWING TWO WAYS: A 24" CLAY LINER WITH A MAXIMUM HYDRAULIC CONDUCTIVITY OF 1 x 10-7 CM/SEC OR WITH A WVDEP APPROVED COMPOSITE LINER SYSTEM. A BENDTARP PPL 24 LINER HAS BEEN APPROVED FOR PREVIOUS PROJECTS, HOWEVER THE ACCEPTABILITY OF THIS PRODUCT SHALL BE CONFIRMED WITH WVDEP DIVISION OF WATER AND WASTE MANAGEMENT PRIOR TO CONSTRUCTION.

POND LANDSCAPING NOTE:

1. THE SWM BASIN SHALL BE VEGETATED WITH GRASS TO ENHANCE WATER QUALITY. ADDITIONAL PLANTINGS MAY BE PROVIDED AT THE OWNERS DISCRETION, HOWEVER NO LANDSCAPING SHALL BE PERMITTED ALONG ANY PORTION OF THE POND EMBANKMENT.

Jefferson County, WV **Stormwater Management Ordinance**

Stormwater Facility Inspection Report

Address of facility:		Date of Inspection:		
Associated Business or Property Owner's Name:				
Company Conducting Inspection:				
Name of Inspector:				
	Condition			
	-Substandard- Requires replacement or significant repairs	-Fair- Minor structural maintenance required	-Satisfactory- Minor debris removal and/or weeding recommended	-Good- No action or considerations to be taken
Vegetation or filter media				
Fences or other safety devices				
Spillways, valves, or other control structures				
Embankments, slopes, and safety benches				
Reservoir or treatment areas				
Inlet and outlet channels or structures				
Underground drainage				
Forebay areas				
Sand Filters				
Swales and conveyance systems				
Permeable pavements				
Signage			NA	
Other				

SIDE VIEW OF WEIR:

NOT TO SCALE

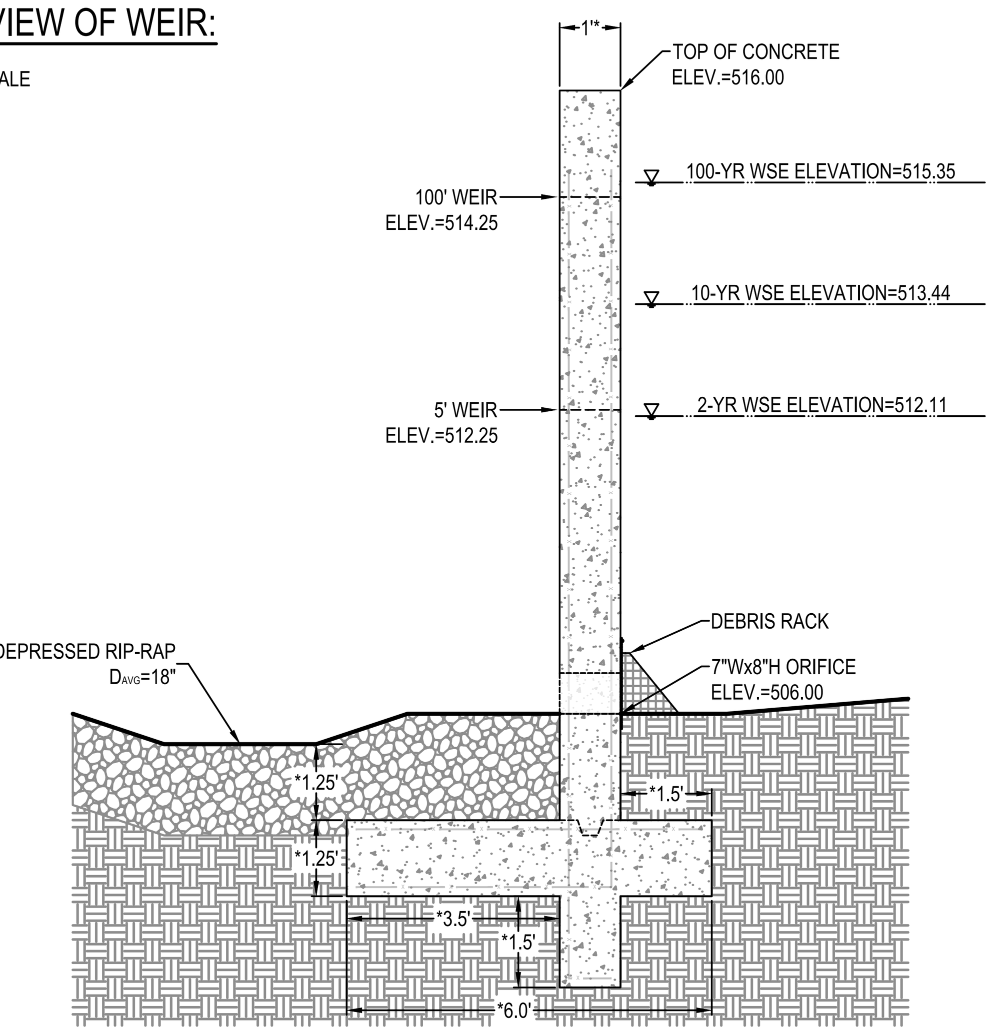

NOTES:
1. *REFER TO NOTE 3(B) OF STORMWATER MANAGEMENT NARRATIVE. STRUCTURAL DESIGN OF WEIR WALL BY OTHERS, UNDER SEPARATE COVER.
2. STRUCTURAL DESIGN OF WEIR STRUCTURE, IF NOT IN CONFORMANCE WITH DETAILS AS SHOWN, SHALL BE SUBMITTED BY CONTRACTOR TO JEFFERSON COUNTY FOR APPROVAL.

JEFFERSON COUNTY, WEST VIRGINIA
STORMWATER MANAGEMENT FACILITIES MAINTENANCE REQUIREMENT

1. IN ACCORDANCE WITH THE JEFFERSON COUNTY STORMWATER MANAGEMENT ORDINANCE UNDER WHICH THIS PROJECT WAS APPROVED; PERIODIC INSPECTION AND MAINTENANCE SHALL BE PERFORMED TO ENSURE THE PROPER FUNCTION OF ALL STORMWATER MANAGEMENT FACILITIES.
2. ALL MAINTENANCE AND REPAIR, PERIODOC INSPECTIONS, AND CLEANING OF STORMWATER MANAGEMENT FACILITIES SHALL BE THE RESPONSIBILITY OF THE HOMEOWNERS ASSOCIATION OR LOT OWNERS ASSOCIATION, AND/OR PROPERTY OWNER OR OTHER RESPONSIBLE ENTITY, AND SHALL BE PERFORMED IN ACCORDANCE WITH THE JEFFERSON COUNTY STORMWATER MANAGEMENT ORDINANCE UNDER WHICH THE PROJECT WAS APPROVED.

STORMWATER FACILITY MAINTENANCE AND INSPECTION SCHEDULE

1. REGULAR MAINTENANCE:

   A. MOWING (SEASONAL) AND REMOVAL OF TRASH AND DEBRIS SHALL BE PERFORMED ON A MONTHLY BASIS AT A MINIMUM.

   B. REPAIR AND STABILIZATION OF ERODED AREAS SHALL BE PERFORMED DURING GROWING SEASON AND ON AN ANNUAL BASIS AT A MINIMUM.

2. PERIODIC INSPECTIONS:

   ALL ELEMENTS OF STORMWATER MANAGEMENT FACILITIES SHALL BE INSPECTED FOR PROPER OPERATION AND MAINTENANCE AS FOLLOWS.

   A. AFTER THE FIRST YEAR OF OPERATION.

   B. ONCE EVERY YEAR AFTER THE FIRST YEAR OF OPERATION.

   C. WITHIN 15 DAYS AFTER ANY MAINTENANCE ACTIVITIES ARE PERFORMED AND COMPLETED.

   D. AFTER A 3-INCH RAINFALL WITHIN A 24-HOUR PERIOD STORM EVENT (2-YEAR, 24-HOUR STORM EVENT).

   E. AS REQUESTED BY THE JEFFERSON COUNTY ENGINEERING DEPARTMENT IN RESPONSE TO COMPLAINTS OR NOTICE OF POSSIBLE VIOLATIONS.

BEST MANAGEMENT PRACTICES (BMP'S) MAINTENANCE PROCEDURES

1. MAINTENANCE FOR RAIN GARDENS, VEGETATED DRAINAGE SWALES, RIPARIAN BUFFERS, INFILTRATION BASINS, ETC., SHALL BE PERFORMED IN ACCORDANCE WITH THE BMP MAINTENANCE SPECIFICATIONS IN THE WEST VIRGINIA DEPARTMENT OF ENVIRONMENTAL PROTECTION'S WEST VIRGINIA STORMWATER MANAGEMENT AND DESIGN GUIDANCE MANUAL.

PROJECT-SPECIFIC MAINTENANCE PROCEDURES REQUIRED

(DETERMINED BY THE STORMWATER MANAGEMENT PLAN ENGINEER-OF-RECORD)

1. SEE NOTES PROVIDED ON THE SWM DETAILS.

SECTION THRU DAM EMBANKMENT:

NOT TO SCALE

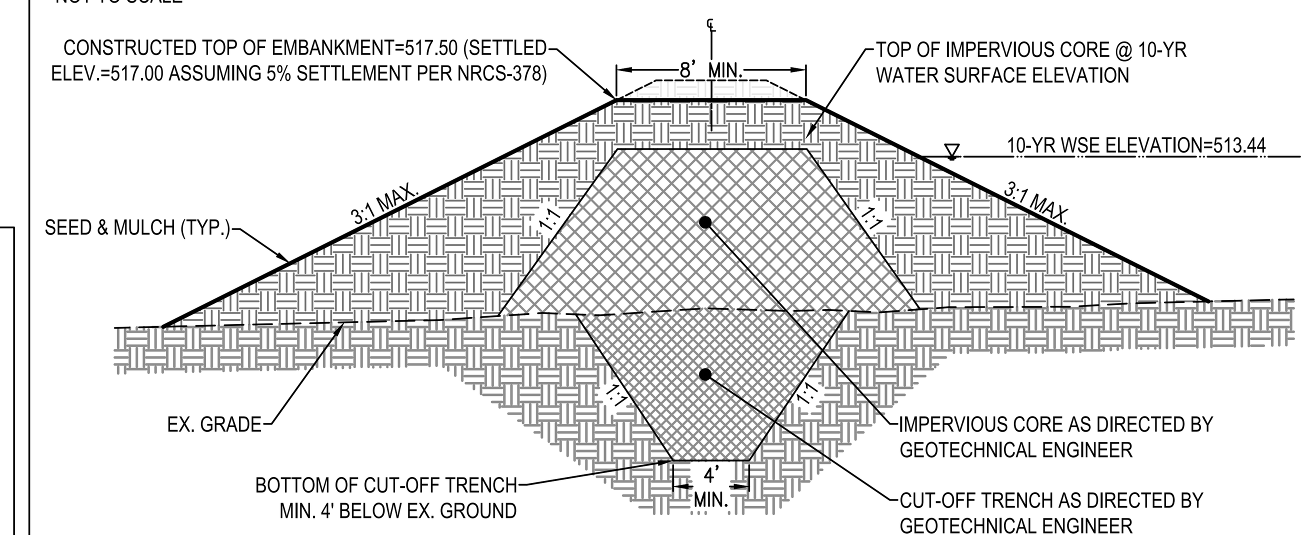

POND LINER DETAIL:

NOT TO SCALE

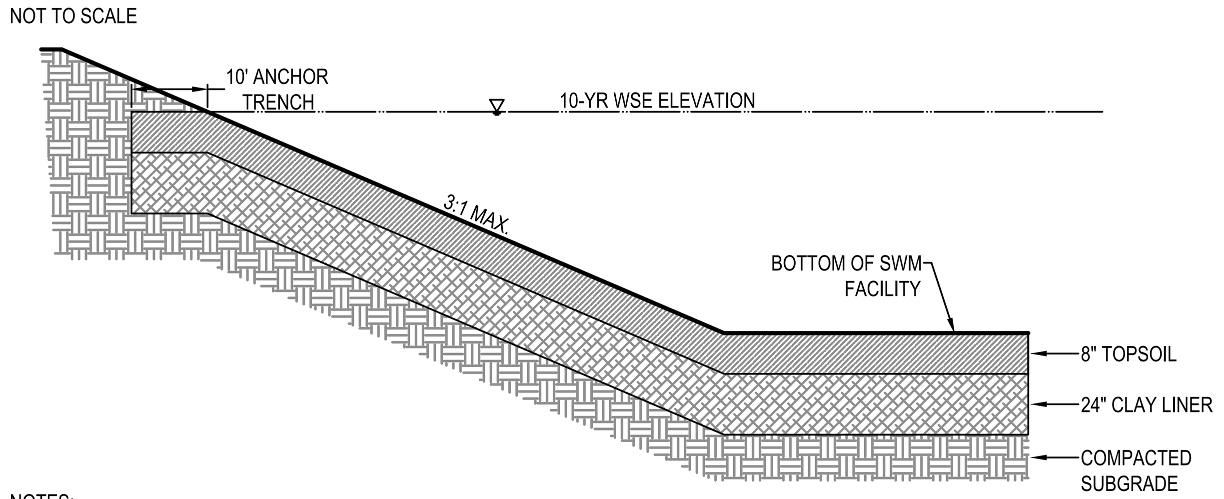

NOTES:
1. POND BOTTOM SHALL BE LINED WITH A MINIMUM OF 24" OF SUITABLE CLAY SOILS WITH A USGS SOIL CLASSIFICATION OF CL OR CH. THE APPROVED CLAY SHALL HAVE A MINIMUM LIQUID LIMIT OF 30%, A MINIMUM PLASTICITY INDEX OF 15%, AND A MAXIMUM HYDRAULIC CONDUCTIVITY OF 1 x 10-7 CM/SEC.
2. ALL MATERIALS SHALL BE PRE-APPROVED PRIOR TO PLACEMENT. SAMPLES SHALL BE TAKEN FOR EACH LIFT PLACED TO VERIFY THE APPROPRIATE HYDRAULIC CONDUCTIVITY RATE HAS BEEN ACHIEVED.
3. INSTALL CLAY LINER IN 6" LIFTS AND COMPACT USING A SHEEPSFOOT ROLLER TO 98% OF MAXIMUM DRY DENSITY AT 2% OF OPTIMUM MOISTURE CONTENT AS DETERMINED BY STANDARD PROCTOR METHOD ASTM D-698.
4. PLACE 8" LAYER OF TOPSOIL OVER CLAY LINER.
5. SPECIAL ATTENTION MUST BE GIVEN TO SEALING AROUND PIPES AND STRUCTURES. COMPACT INTO A NOTCH IN THE SUBGRADE AND HAND COMPACT.

FRONT ELEVATION OF WEIR:

NOT TO SCALE

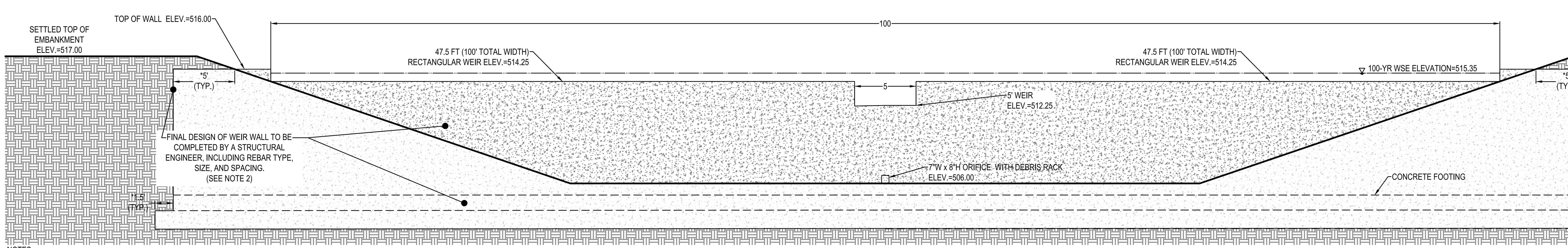

NOTES:
1. *REFER TO NOTE 3(B) OF STORMWATER MANAGEMENT NARRATIVE.
2. STRUCTURAL DESIGN OF WEIR WALL, IF NOT IN CONFORMANCE WITH DETAILS AS SHOWN, SHALL BE SUBMITTED BY CONTRACTOR TO JEFFERSON COUNTY FOR APPROVAL.

INTEGRITY FEDERAL SERVICES
CIVIL ENGINEERING • LANDSCAPE ARCHITECTURE • PLANNING
148 S. Queen Street, Suite 201 • Phone: 304-725-8456
Martinsburg, WV 25401 • www.ifs-ae.com

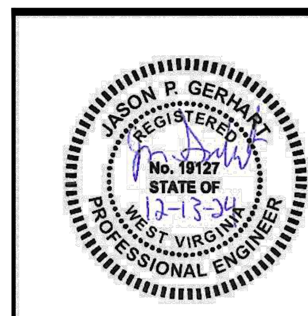

SEAL:

REVISIONS
1. 10/23/2024 - JEFFERSON COUNTY, WVDOH, CTUB, AND WVAW COMMENTS
2. 12/13/2024 - JEFFERSON COUNTY AND CTUB PUMP STATION COMMENTS

STORMWATER MANAGEMENT NARRATIVE

BIRDHILL MEADOWS SUBDIVISION PHASE 1

TAX MAP 3, PARCEL 29; D.B. 1291, PG. 381
MIDDLEWAY TAX DISTRICT
JEFFERSON COUNTY, WEST VIRGINIA

J.C. FILE #24-12-SD

SCALE:	HORIZ.: NTS VERT.: NTS
DATE: JULY 2024	
JOB: 3568-0301	
DRAWN: JMM	CHECK: JPG
CADD: C-CJ-501.DWG	
NCS:	
SHEET: 133 OF 147	

COPYRIGHT NO REPRODUCTION OR USE OF THIS DRAWING IS ALLOWED IN PART OR IN WHOLE BY ANY PROCESS WITHOUT PRIOR WRITTEN AUTHORIZATION FROM WILLIAM H. GORDON ASSOCIATES, INC. (GORDON)

FILE PATH: G:\PROJECT\GENERAL\3568-0301 MILLER PROPERTY PHASE 1\ENGIN\PLANS\C-CJ-501.DWG

EW-10 PC

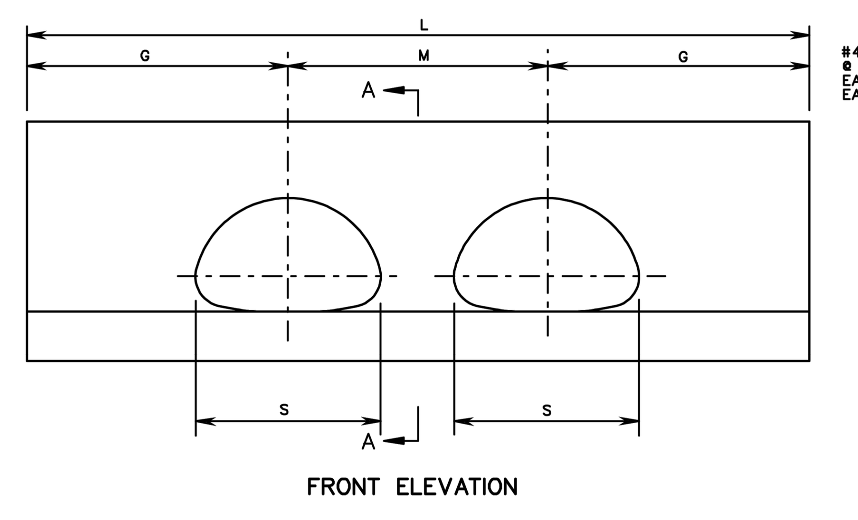

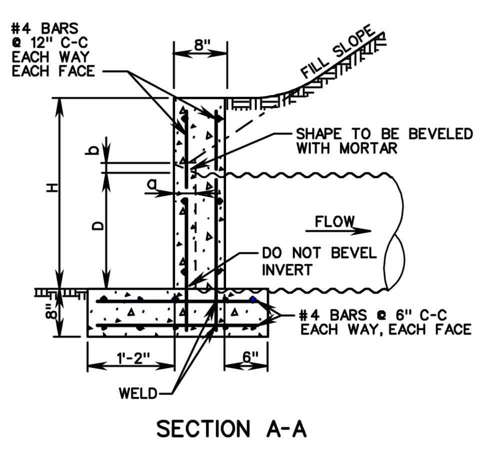

NOTES:

1. CONCRETE TO BE 4000 PSI MINIMUM COMPRESSIVE STRENGTH.
2. IF PIPE IS TO BE SKEWED THE OPENING WILL BE ADJUSTED TO ACCOMMODATE.
3. REINFORCING STEEL IN ACCORDANCE WITH ASTM A-615 (REINFORCING BARS).
4. PIPE ARCH OPENINGS IN PRECAST DRAINAGE UNITS SHALL NOT EXCEED 4 INCHES AT ANY GIVEN POINT BETWEEN THE PIPE AND THE PRECAST UNIT.
5. DIMENSIONS SHOWN ARE MINIMUM. ACTUAL MEASUREMENTS MAY VARY WITH MANUFACTURER'S TOLERANCE.
6. IN NO CASE SHALL TOP OF ENDWALL PROJECT ABOVE FILL SLOPE, OR SHOULDER.
7. HEADWALL TO BE BEVELED IN ALL AREAS EXCEPT WHERE A CONFLICT WITH INVERT OR WINGWALL OCCUR.
8. BEVEL EDGE IS REQUIRED ON THE HEADWALL AT THE INLET END OF THE CULVERT HEADWALL AT OUTLET END MAY BE EITHER SQUARE EDGE OR BEVELED.
9. ¾" CHAMFER MAY BE PROVIDED ON ALL EDGES AT MANUFACTURER'S OPTION.

PRECAST ENDWALL DIMENSIONS

S	D	M	G	L	H	a	b
17"	13"	2'-6"	2'-2"	6'-10"	2'-3"	0'-2"	0'-1¼"
21"	15"	2'-10"	2'-7"	8'-0"	2'-5"	0'-2½"	0'-1½"
24"	18"	3'-1"	3'-1"	9'-3"	2'-8"	0'-3"	0'-2"
28"	20"	3'-5"	3'-6"	10"-5"	2'-10"	0'-3"	0'-2"
35"	24"	4'-0"	4'-3"	12'-6"	3'-2"	0'-4"	0'-2½"
*40"	31"	4'-10"	5'-2"	15'-2"	3'-7"	0'-4½"	0'-3"
42"	29"						
*46"	36"	5'-7"	6'-0"	17'-7"	3'-11"	0'-5½"	0'-3½"
49"	33"						
*53"	41"	6'-6"	6'-11"	20'-4"	4'-4"	0'-6"	0'-4"
57"	38"						

* DIMENSIONS FOR 3" X 1" AND 5" X 1" CORRUGATION

SPECIFICATION REFERENCE 105 302

PRECAST ENDWALLS FOR MULTIPLE PIPE ARCHES

13" - 38" RISE

VIRGINIA DEPARTMENT OF TRANSPORTATION

VDOT ROAD AND BRIDGE STANDARDS | REVISION DATE | SHEET 1 OF 1 | 101.25

EW-7 PC

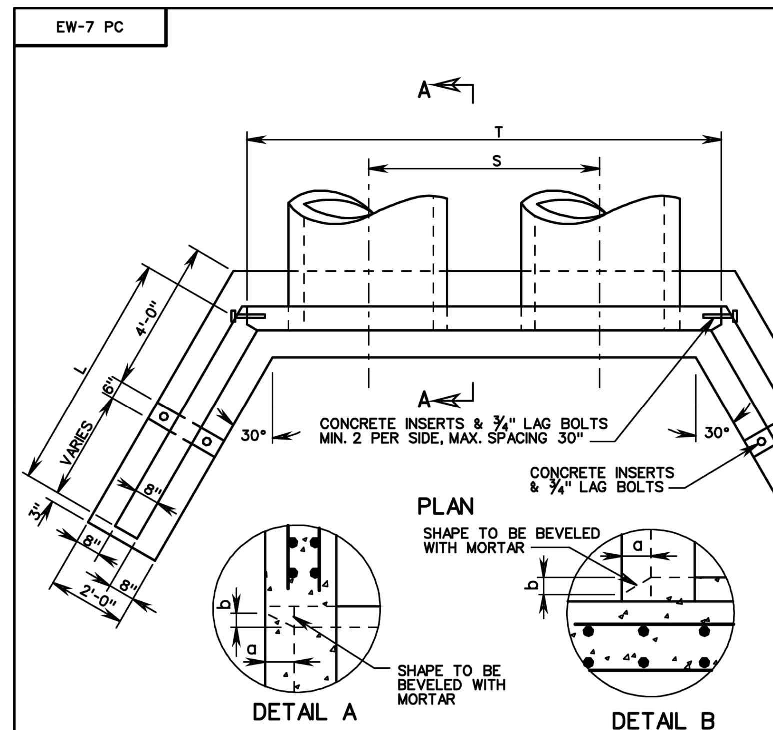

FOR CONCRETE OR CORRUGATED METAL PIPE

PIPE I.D.	H	T	S	L 1½:1 SLOPE	L 2:1 SLOPE	a	b
42"	5'-6"	12'-6"	6'-0"	6'-7½"	8'-8"	0'-4½"	0'-3½"
48"	6'-0"	13'-10"	6'-10"	7'-6"	9'-10"	0'-5"	0'-4"
54"	6'-6"	15'-2"	7'-8"	8'-4½"	11'-0"	0'-5¾"	0'-4½"
60"	7'-0"	16'-6"	8'-6"	9'-3"	12'-1½"	0'-6¼"	0'-5"
66"	7'-7"	17'-10"	9'-4"	10'-1½"	13'-3½"	0'-7"	0'-5½"
72"	8'-2"	19'-2"	10'-2"	11'-0"	14'-5½"	0'-7"	0'-5½"
78"	8'-8½"	20'-6"	11'-0"	11'-10"	15'-7"	0'-7"	0'-5½"
84"	9'-3"	21'-10"	11'-10"	12'-8½"	16'-9"	0'-7"	0'-5½"
90"	9'-11"	23'-5"	12'-9"	13'-7"	17'-11"	0'-7"	0'-5½"
96"	10'-7"	25'-0"	13'-7"	14'-6"	19'-01"	0'-7"	0'5½"

NOTES:

1. CONCRETE TO BE 4000 PSI MINIMUM COMPRESSIVE STRENGTH.
2. IF PIPE IS TO BE SKEWED, THE OPENING WILL BE ADJUSTED TO ACCOMMODATE ANGLES UP TO 15°.
3. REINFORCING STEEL IN ACCORDANCE WITH ASTM A-615 (REINFORCING BARS).
4. PIPE OPENINGS IN PRECAST DRAINAGE UNITS SHALL NOT EXCEED 4 INCHES AT ANY GIVEN POINT BETWEEN THE PIPE AND THE PRECAST UNIT.
5. DIMENSIONS SHOWN ARE MINIMUM. ACTUAL MEASUREMENTS MAY VARY WITH MANUFACTURER'S TOLERANCES.
6. IN NO CASE SHALL TOP OF ENDWALL PROTRUDE ABOVE FILL SLOPE, DITCH SLOPE, OR SHOULDER.
7. HEADWALL TO BE BEVELED IN ALL AREAS EXCEPT WHERE A CONFLICT WITH INVERT OR WINGWALL OCCUR.
8. BEVEL EDGE AS REQUIRED ON THE HEADWALL AT THE INLET END OF THE CULVERT (WHERE THE FLOW ENTERS THE CULVERT).
9. HEADWALL AT THE OUTLET END OF THE CULVERT MAY BE EITHER SQUARE EDGE OR BEVEL EDGE.
10. ¾" CHAMFER MAY BE PROVIDED ON ALL EDGES AT MANUFACTURER'S OPTION.

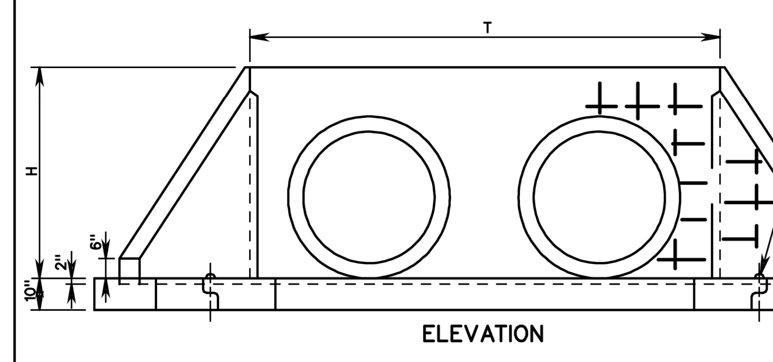

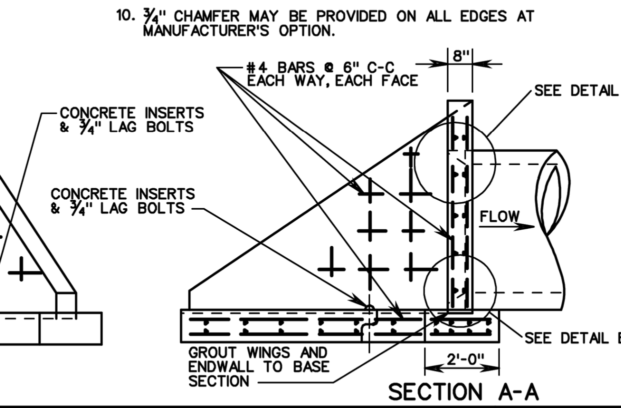

VDOT ROAD AND BRIDGE STANDARDS | SHEET 1 OF 1 | 101.18 | REVISION DATE

PRECAST ENDWALLS FOR MULTIPLE PIPE CULVERTS

42" - 96" CIRCULAR PIPES

VIRGINIA DEPARTMENT OF TRANSPORTATION

SPECIFICATION REFERENCE 105 302

SWM-DR

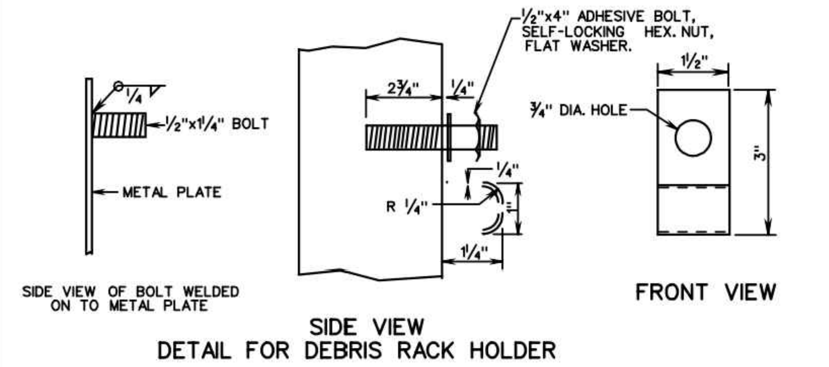

1. COST OF DEBRIS RACK, METAL PLATE, AND DEBRIS RACK HOLDER TO BE INCLUDED IN THE BID PRICE FOR THE SWM DRAINAGE STRUCTURE.
2. DEBRIS RACK MAY BE FABRICATED FROM WELDED ⅜" DIAMETER BARS OR ½" THICK HIGH DENSITY POLYETHYLENE. METAL COMPONENTS OF DEBRIS RACK MUST NOT BE GALVANIZED.
3. DEBRIS RACK TO BE HINGED AS SHOWN OR CONTRACTOR MAY SUBSTITUTE A COMPARABLE DESIGN AS APPROVED BY THE ENGINEER.
4. THE LOCATION OF THE DEBRIS RACK HOLDER MAY BE ADJUSTED FOR VARIABLE CONDITIONS. WHEN HOLDER BOLT IS LOCATED ON THE METAL PLATE THE ½" DIA. BOLT LENGTH IS TO BE REDUCED ¼ LG. AND WELDED TO THE PLATE. DEBRIS RACK HOLDER AND ALL HARDWARE IS TO BE GALVINIZED.

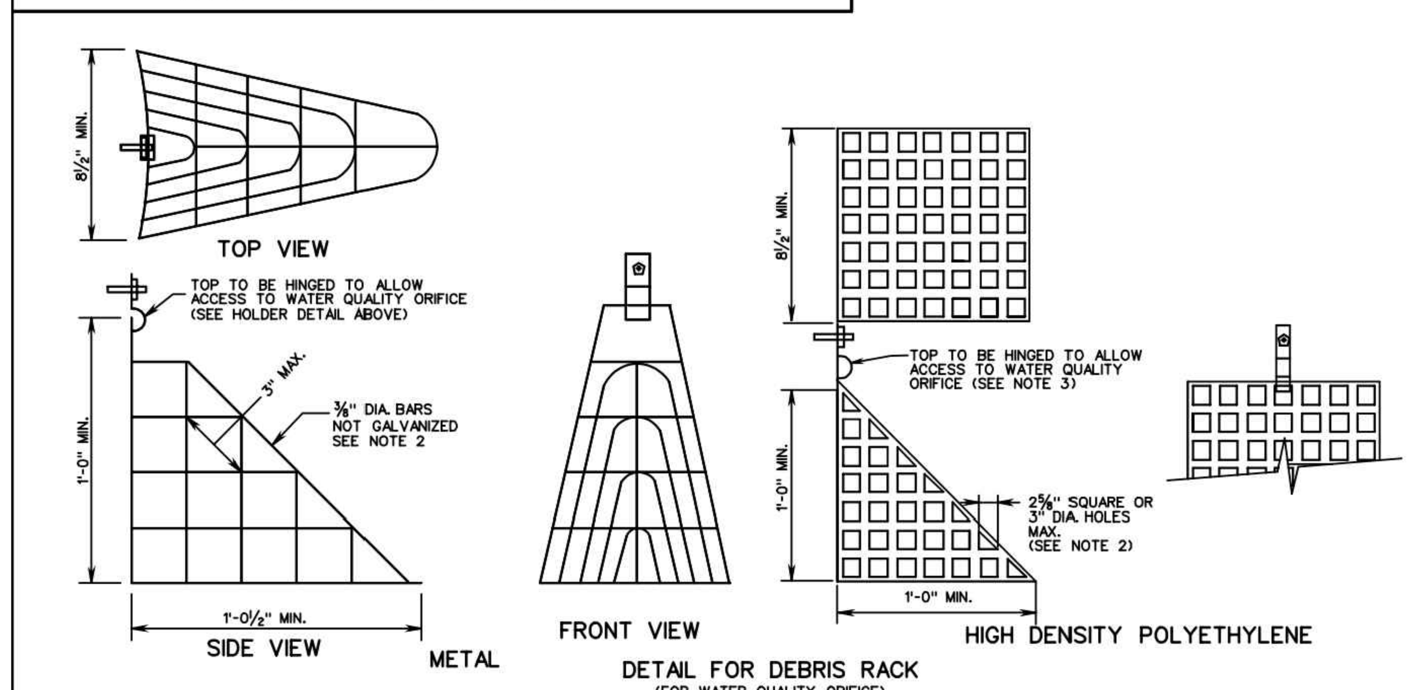

SPECIFICATION REFERENCE 302

STORMWATER MANAGEMENT (SWM) DETAILS

DEBRIS RACK, METAL PLATE, WATER QUALITY ORIFICE, CONCRETE CRADLE
(FOR SWM DRAINAGE STRUCTURES, SWM RISER PIPES AND SWM DAMS)
VIRGINIA DEPARTMENT OF TRANSPORTATION

VDOT ROAD AND BRIDGE STANDARDS | REVISION DATE | SHEET 2 OF 5 | 114.05

SWM-DR

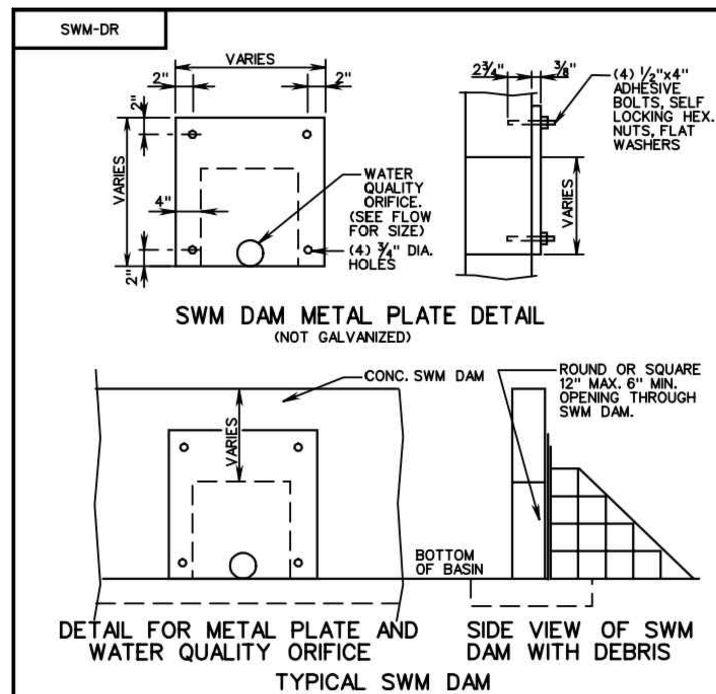

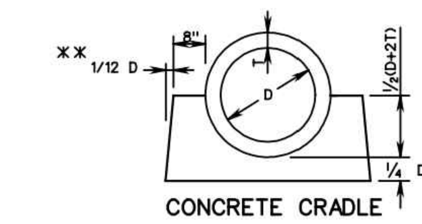

PIPE SIZE INCHES	CRADLE BOTTOM WIDTH (INCHES)	CRADLE HEIGHT (INCHES)	CRADLE TOP WIDTH (INCHES)	INCREMENT, IN CUBIC YARDS, PER LINEAR FOOT OF PIPE
12	34	14	32	0.093
15	38	15.75	35.5	0.110
18	42	17.5	39	0.129
24	50	21	46	0.168
30	58	26	53	0.233
36	66	31	60	0.307
42	74	36	67	0.390

CONCRETE SHALL BE CLASS A3
* BUT NOT LESS THAN 6"
** IF THE PIPE IS LAID IN AN EXCAVATED TRENCH, THEN THE SIDE WALLS MAY CONFORM TO THE TRENCH SHAPE (IE THE TRENCH MAY BECOME THE CRADLE FORM).

CONCRETE CRADLE IS TO BE INSTALLED UNDER THE ENTIRE LENGTH OF CULVERT AT EACH STORMWATER MANAGEMENT BASIN.

CONCRETE CRADLE IS TO BE PAID FOR AS MISCELLANEOUS CONCRETE AND SUMMARIZED IN CUBIC YARDS FOR EACH PIPE LOCATION

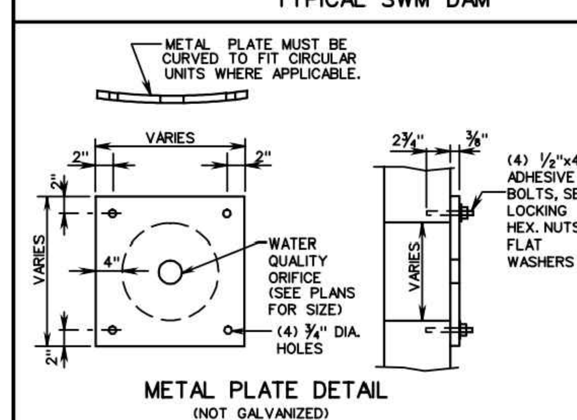

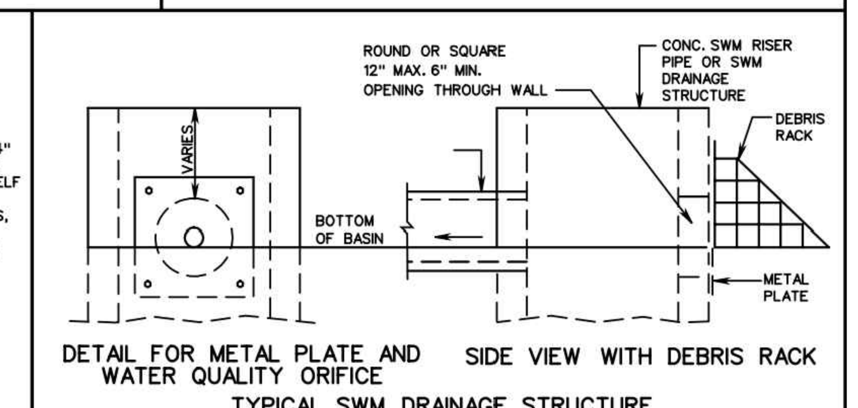

VDOT ROAD AND BRIDGE STANDARDS | SHEET 3 OF 5 | 114.06 | REVISION DATE

STORMWATER MANAGEMENT (SWM) DETAILS

DEBRIS RACK, METAL PLATE, WATER QUALITY ORIFICE, CONCRETE CRADLE
(FOR SWM DRAINAGE STRUCTURES, SWM RISER PIPES AND SWM DAMS)
VIRGINIA DEPARTMENT OF TRANSPORTATION

SPECIFICATION REFERENCE 302

INTEGRITY FEDERAL SERVICES
CIVIL ENGINEERING • LANDSCAPE ARCHITECTURE • PLANNING
148 S. Queen Street, Suite 201 • Phone: 304-725-8456
Martinsburg, WV 25401 • www.ifs-ae.com

JASON P. GERHART REGISTERED No. 19127 STATE OF WEST VIRGINIA PROFESSIONAL ENGINEER 12-13-24

SEAL:

REVISIONS
1. 10/23/2024 - JEFFERSON COUNTY, WVDOH, CTUB, AND WVAW COMMENTS
2. 12/13/2024 - JEFFERSON COUNTY AND CTUB PUMP STATION COMMENTS

STORMWATER MANAGEMENT DETAILS

BIRDHILL MEADOWS SUBDIVISION PHASE 1

TAX MAP 3, PARCEL 29; D.B. 1291, PG. 381
MIDDLEWAY TAX DISTRICT
JEFFERSON COUNTY, WEST VIRGINIA

J.C. FILE #24-12-SD

SCALE: HORIZ.: AS NOTED VERT.: N/A
DATE: JULY 2024
JOB: 3568-0301
DRAWN: JMM CHECK: JPG
CADD: C-CJ-501.DWG
NCS:
SHEET: 134 OF 147

FILE PATH: G:\PROJECT\GENERAL\3568-0301 MILLER PROPERTY PHASE 1\ENGIN\PLANS\C-CJ-501.DWG
COPYRIGHT . NO REPRODUCTION OR USE OF THIS DRAWING IS ALLOWED IN PART OR IN WHOLE BY ANY PROCESS WITHOUT PRIOR WRITTEN AUTHORIZATION FROM INTEGRITY FEDERAL SERVICES (INTEGRITY).

SWM POND CELL A XSEC - PLAN

SCALE: 1"=50'

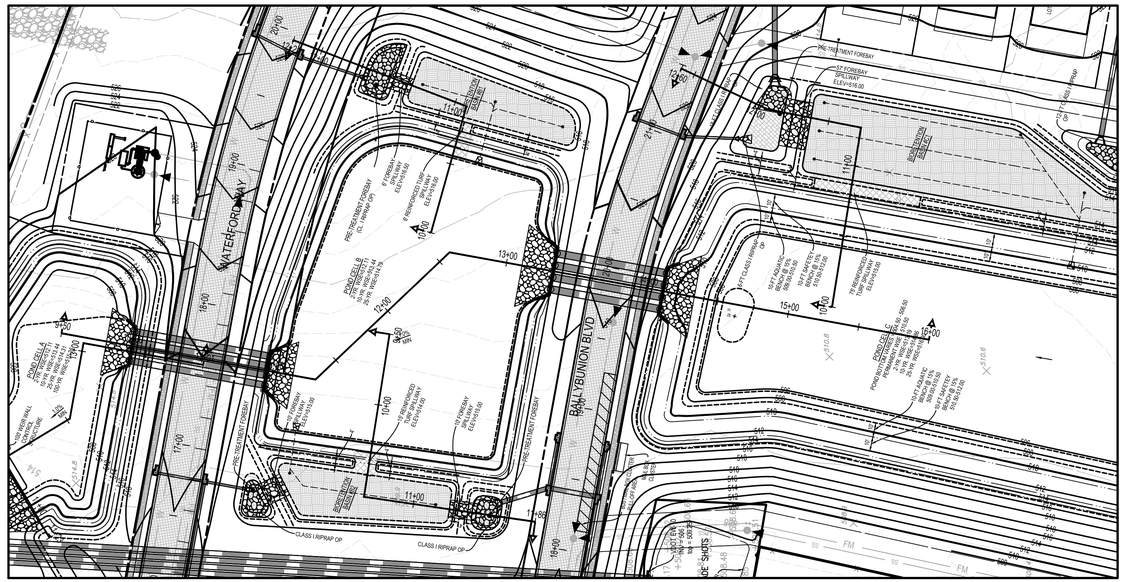

SWM POND CELL B-C XSEC - PLAN

SCALE: 1"=50'

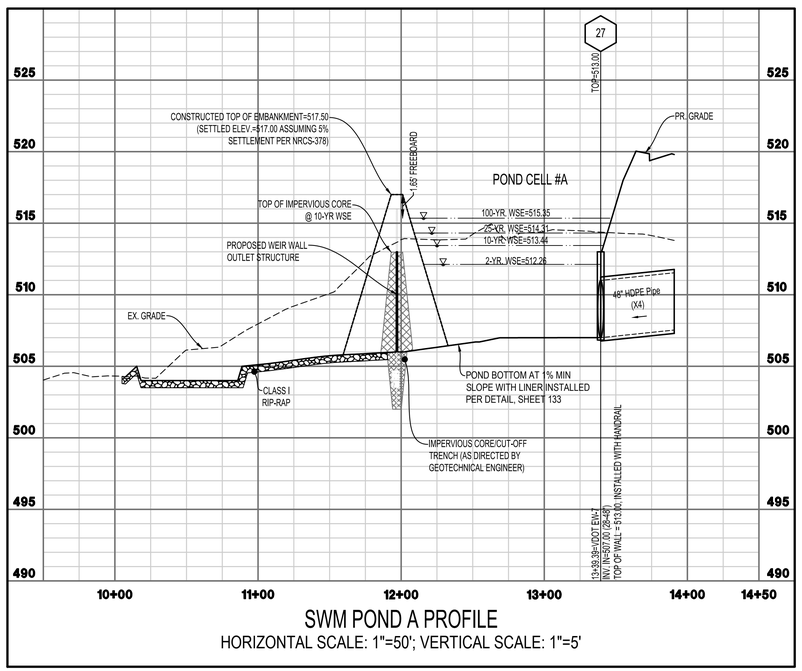

SWM POND A PROFILE

HORIZONTAL SCALE: 1"=50'; VERTICAL SCALE: 1"=5'

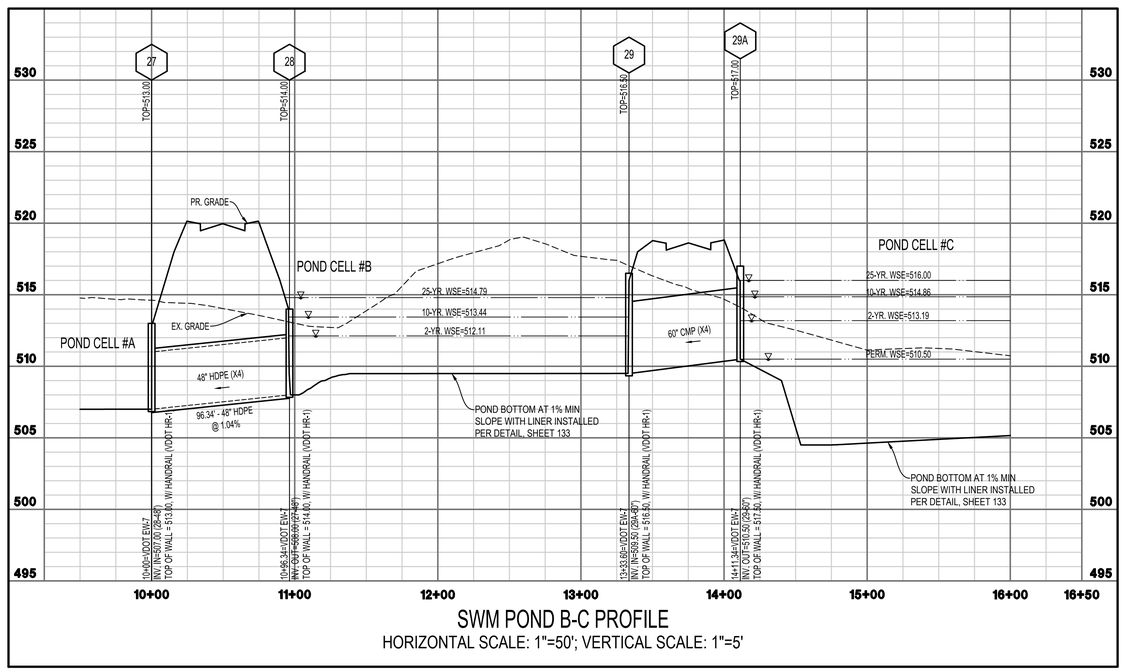

SWM POND B-C PROFILE

HORIZONTAL SCALE: 1"=50'; VERTICAL SCALE: 1"=5'

0 2.5 5 10 15

VERTICAL SCALE: 1"=5'

50 25 0 50 100 150

GRAPHICAL SCALE: 1"=50'

INTEGRITY
FEDERAL SERVICES
CIVIL ENGINEERING • LANDSCAPE ARCHITECTURE • PLANNING
148 S. Queen Street, Suite 201 • Phone: 304-725-8456
Martinsburg, WV 25401 • www.ifs-se.com

JASON P. GERHART
REGISTERED
No. 19127
STATE OF
WEST VIRGINIA
PROFESSIONAL ENGINEER
10-13-24

SEAL:

REVISIONS

1. 10/23/2024 - JEFFERSON COUNTY, WVDOH, CTUB, AND WVAW COMMENTS
2. 12/13/2024 - JEFFERSON COUNTY AND CTUB PUMP STATION COMMENTS

STORMWATER MANAGEMENT PLAN AND PROFILES

BIRDHILL MEADOWS SUBDIVISION PHASE 1

TAX MAP 3, PARCEL 29; D.B. 1291, PG. 381
MIDDLEWAY TAX DISTRICT
JEFFERSON COUNTY, WEST VIRGINIA

J.C. FILE #24-12-SD

SCALE:	HORIZ.: AS NOTED VERT.: 1"=5'
DATE:	JULY 2024
JOB:	3568-0301
DRAWN: JMM	CHECK: JPG
CADD: C-CJ-201.DWG	
NCS:	
SHEET:	135 OF 147

FILEPATH: S:\PROJECTS\RESIDENTIAL\3568-0301 MILLER PROPERTY\PHASE 1\ENGINEER\CAD\C-CJ-201.DWG
COPYRIGHT © 2024 INTEGRITY FEDERAL SERVICES, INC. ALL RIGHTS RESERVED. THIS DRAWING IS THE PROPERTY OF INTEGRITY FEDERAL SERVICES, INC. AND IS NOT TO BE REPRODUCED OR PUBLISHED IN ANY MANNER WITHOUT THE EXPRESS WRITTEN PERMISSION OF INTEGRITY FEDERAL SERVICES, INC.